DENON

Hi-Fi Component

SERVICE MANUAL

STEREO CASSETTE TAPE DECK

MODEL DR-M4

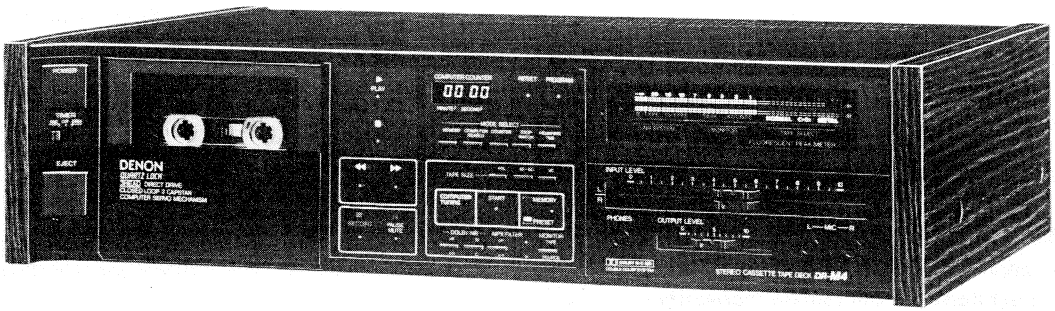

NIPPON COLUMBIA CO., LTD.

TABLE OF CONTENTS

MAIN FEATURES 1
SPECIFICATIONS 2
PART NAMES AND FUNCTIONS ..... 3~4
BLOCK DIAGRAM 5
LEVEL DIAGRAM 6
OUTLINE OF THE MECHANISM CONTROL MICROCOMPUTER 7
COMPUTER TAPE COUNTER ..... 8~10
DISASSEMBLY INSTRUCTIONS ..... 11~12
ADJUSTING AND CHECKING THE MECHANISM SECTION ..... 13~15
ADJUSTING THE ELECTRICAL SECTIONS ..... 16~18
PARTS LIST OF MECHANISM UNIT 19
PARTS LIST OF EXPLODED VIEW 20
PARTS LIST OF P.W. BOARD ..... 21~25
EXPLODED VIEW OF MECHANISM UNIT 26
EXPLODED VIEW OF CABINET AND CHASSIS GROUP 27
P.W. BOARD OF KU-0450 AUDIO AMP UNIT 28
P.W. BOARD OF KU-0451 C.T.S AND KU-0452 FL METER UNIT 29
P.W. BOARD OF KU-0449 LOGIC AND POWER UNIT
AND KU-0453-1 FL COUNTER UNIT
AND KU-0454-2 CONTROL UNIT 30
P.W. BOARD OF KU-0455 CAPSTAN SERVO UNIT
AND KU-0456 QUARTZ LOCKED UNIT 31
CONNECTIONS OF P.W. BOARD 32
SCHEMATIC DIAGRAM OF AUDIO AMP UNIT 33
SCHEMATIC DIAGRAM OF CTS UNIT 34
SCHEMATIC DIAGRAM OF LOGIC AND POWER UNIT 35
SCHEMATIC DIAGRAM OF FL COUNTER UNIT 36
SCHEMATIC DIAGRAM OF CAPSTAN SERVO UNIT
AND CONTROL UNIT 37
SCHEMATIC DIAGRAM OF CUE UNIT AND FL METER UNIT
AND QUARTZ UNIT 38

MAIN FEATURES

- Computer-controlled servo technology
  - Quartz-lock direct drive 2 capstan transport.
  - Silent, soft-touch controls provide maximum ease-of-use.
  - Computer-controlled, fully logic tape controls enable fool-proof operation.
- Three-head design utilizes **DENON**'s new SF combination record/play head assembly.
- Computing tape counter with 4-digit readout indicates remaining time on tape, numerical index, computer search, memory stop and stop watch.
- Computer-controlled tape tuning system provides automatic for level and EQ.
- Dolby-C noise reduction optimizations (Double Dolby System).
- Extended range, dual-color fluor peak meters with auto peak hold.
- Auto tape selector.

SPECIFICATIONS

Type	Vertical tape loading 4-track 2-channel stereo cassette tape deck
Heads	SF Record/Playback combination head x 1 ferrite Erase head x 1
Motors	Quartz-lock FG servo DD motor (for capstan) x 1 DC motor (for reel winding) x 1
Tape speed	4.8 cm/sec.
Fast forward, rewind time	Approx. 90 sec. with a C-60 cassette tape
Recording Bias	Approx. 105 KHz
Overall S/N ratio (at 3% THD level)	Dolby C NR ON. . . . more than 73 dB (CCIR/ARM)
Overall frequency response	20 ~ 23,000 Hz (at −20 dB METAL tape) 30 ~ 20,000 Hz (at −20dB CrO_2 tape) 30 ~ 19,000 Hz (at −20dB LH tape)
Channel separation	More than 40 dB (at 1KHz)
Crosstalk	More than 65 dB (at 1KHz)
Wow & flutter	Less than 0.027% w rms
Input	
microphone	0.35mV (−67 dB) with input level control at maximum. Input impedance: 10 Kohm unbalanced.
line	77.5mV with input level control at maximum. Input impedance: 50 Kohm unbalanced.
Output	
line	775 mV (0 dB) with output level control at maximum. (with 10 Kohm load, recorded level of 200 Pwb/mm)
headphone	1.2 mW with output level control at maximum (optimum load impedance 8 ohm ~ 2 Kohm).
Accessories	Parallel pin cord x 2
Power supply	50 Hz/60 Hz compatible Note: The rated supply voltage is preset to match that used in the country of original shipment.
Power consumption	22 W
Dimensions	434 (W) x 115 (H) x 286 (D) (mm) 464 (W) x 115 (H) x 286 (D) for US model only.
Weight	6Kg 6.5Kg for US model only.

- Above specifications and design styling are subject to change without notice for improvement.
- "Dolby" and the symbol DD are the registered trademarks of Dolby Laboratories Licensing Corporation. The Dolby Noise reduction system is licensed by Dolby Laboratories Licensing Corporation.

WARNING:

1. Component parts

Parts marked with ⚠ and/or shading in this service manual have special characteristics important to safety. Be sure to use the specified parts for replacement.

2. Leakage current

Before returning the appliance to customer, test the leakage current when the power plug is connected. Use a calibrated (with an error of not more than 5%) leakage current tester and measure the leakage current from any exposed metal to the earth ground. Reverse the power plug polarity and test the above again.

Any current measured MUST NOT EXCEED 0.5 milliamps. Corrective measure must be taken if it exceeds the limit.

PART NAMES AND FUNCTIONS

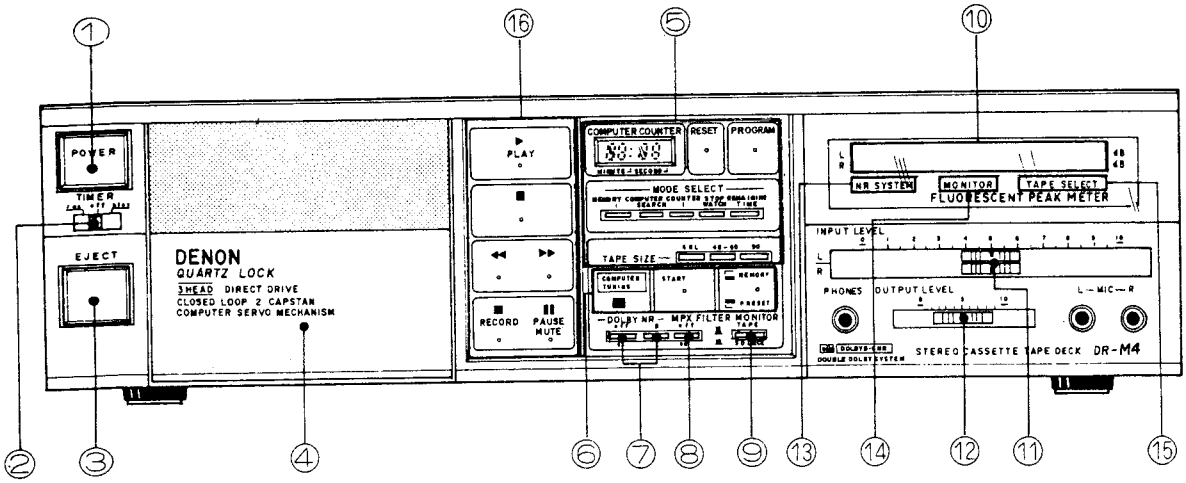

1. POWER switch

Controls the supply of AC power to the deck. One push turns the deck on, a second push turns it off. The deck remains in a stand-by (non-operative) mode for approximately 4 seconds after it is switched on.

2. TIMER switch

This switch is provided for use with an optional audio timer for unattended recording or morning-alarm playback. For non-timer operation, this switch should be set in the "off" position.

3. EJECT button

Press this button to eject the cassette. When the deck is operating (tape is running), press the stop (■) key first to stop the tape transport; then press the EJECT button.

4. CASSETTE COMPARTMENT COVER

If this compartment cover is not closed completely, the deck's transport controls will remain inoperative.

5. COMPUTER COUNTER

A four-digit readout indicates "COMPUTER SEARCH", "COUNTER" "STOP WATCH" and "REMAINING TIME" thanks to the Computer Counter Mode Select Switch.

6. COMPUTER TUNING SYSTEM

This automatic system adjusts the tape for optimum recording characteristics for the individual tape being used.

7. DOLBY NR switches

The left most Dolby NR switch activates (in) or deactivates (out) the deck's Dolby noise reduction circuitry. The right most switch selects between Dolby B-Type (out) or C-Type NR (in).

8. MPX FILTER switch

The MPX FILTER switch should be used to prevent interference with the Dolby NR circuit when making Dolby NR encoded recordings of FM stereo programs. When making Dolby NR encoded recordings from any program source other than FM stereo, leave this switch in the "off" (out) position.

9. MONITOR switch

The SOURCE (in) position of this switch allows you to monitor the source program before it is recorded. The TAPE (out) position of this switch is used for tape playback monitoring or simultaneous monitoring during recording.

10. FLUORESCENT PEAK METERS

These meters indicate recording or playback peak levels for each channel. For peak levels exceeding −1dB, the Auto Peak Hold feature holds the peak level reading for approximately 1.5 seconds.

11. INPUT LEVEL controls

Linear slide controls are used to adjust recording levels for each channel. The upper control is for the left channel; the lower control for the right channel.

12. OUTPUT LEVEL control

This control adjusts playback, recording monitor, and headphone output levels for the both channel simultaneously.

13. NR SYSTEM indicator

This indicator light is interlocked with the Dolby NR switch and informs the user that Dolby NR is in use as well as which B or C-Type.

14. MONITOR indicator

This indicator light is interlocked with the MONITOR switch to inform the use of the selected monitoring source – TAPE or SOURCE.

15. TAPE SELECT indicator

This indicator light is interlocked with the Auto Tape Select feature which automatically adjusts the deck to the type of tape in use. (NORMAL, CrO_2 or METAL).

16. Tape transport controls

▷ PLAY	▷ PLAY KEY	Press to playback tape.
■	■ STOP KEY	Press to stop tape in any mode.
◀◀ ▶▶	◀◀ REW KEY	Press for fast rewind.
	▶▶ FF KEY	Press to fast forward tape winding.
□ RECORD ▯▯ PAUSE MUTE	□ RECORD KEY	To begin recording, press the RECORD and PLAY keys simultaneously. If only the RECORD key is pressed, the deck is placed in the REC PAUSE (record standby) mode.
	▯▯ PAUSE/MUTE KEY	The PAUSE key causes the tape to stop momentarily during recording or to mute the recording input to create blank (non-recorded) portions on the tape.

BLOCK DIAGRAM

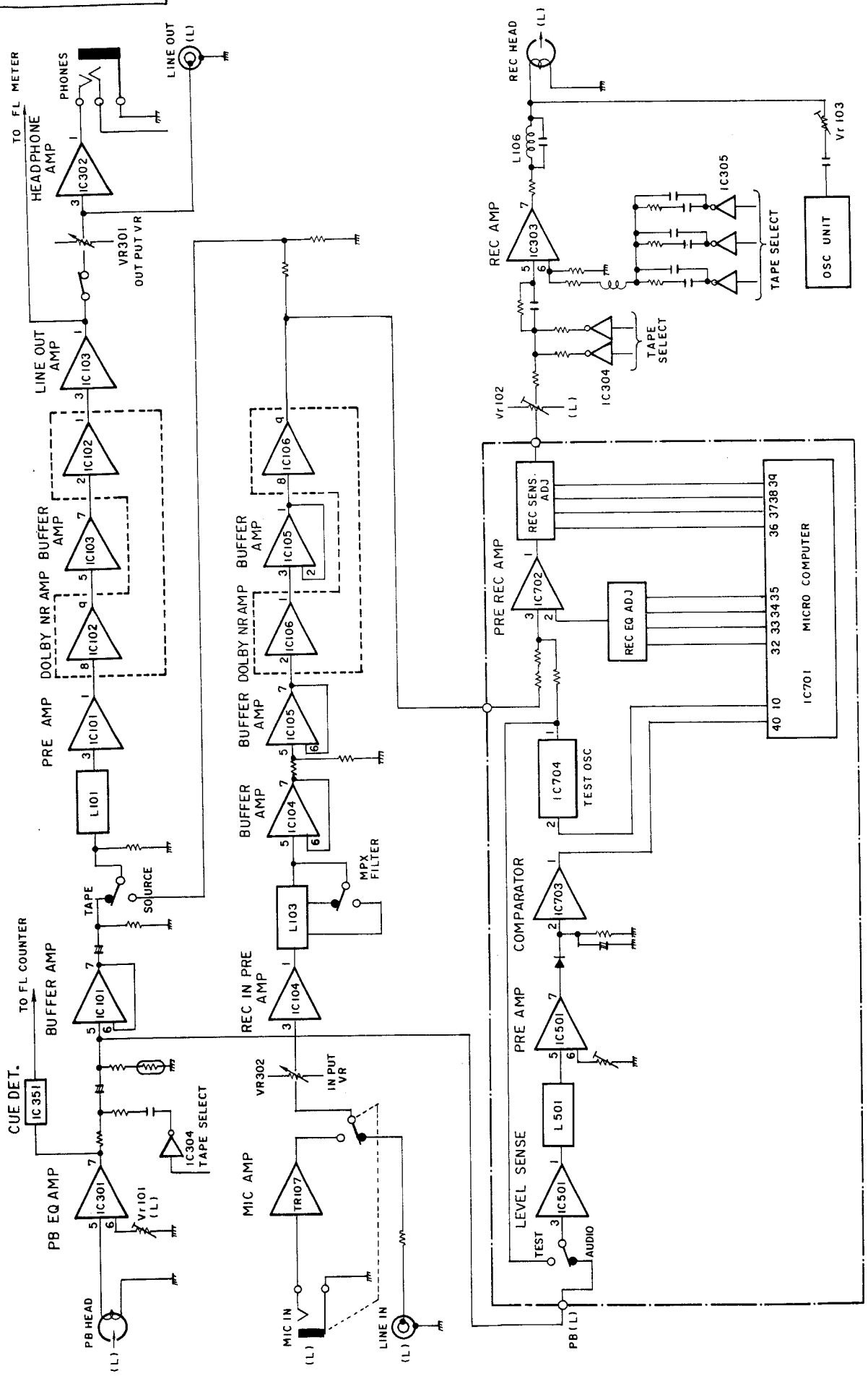

LEVEL DIAGRAM

PLAYBACK SYSTEM

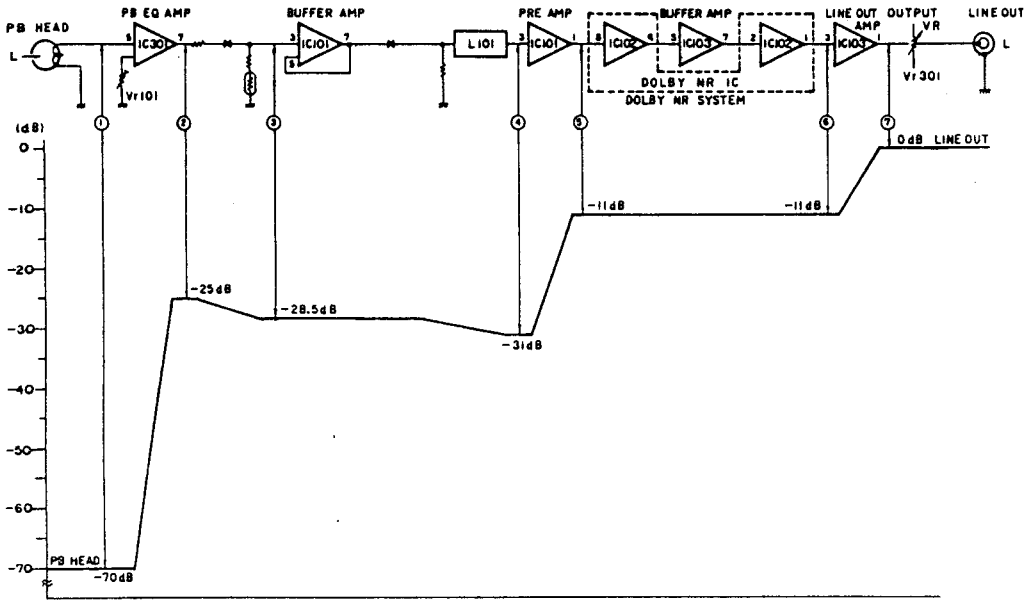

RECORDING SYSTEM

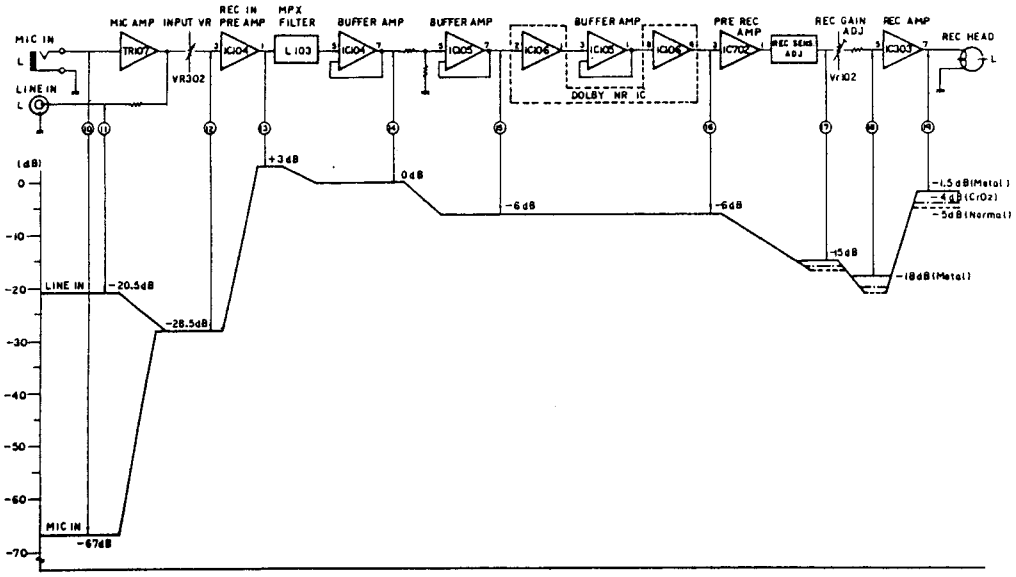

• Outline of the Mechanism Control Microcomputer

The function of the microcomputer, which is applied to the uni-directional transport cam drive control cassette deck mechanism, will receive an outside signal from the operation switch (operations such as PLAY, REC, STOP, FF) during the recognition of the current condition or from the surrounding circuits of the microcomputer (automatic tuning, linear counter, cam encoder, reel pulse, etc.) and sends the appropriate control signal.

To the mechanism: rotational direction of the reel motor, speed, stop, rotational direction of the cam motor, stop.

To the linear counter: makes an output of the mechanism run mode command (REW, FF, PAUSE, PLAY).

To the automatic tuning: REC, P/B, LINE mute signal commands. Makes an output of the BIAS ON/OFF command (CUE command).

To the display: REC, PAUSE (REC MUTE during flash).

In addition, the following points are taken into consideration.

(1) Stable and accurate cam rotation position control is required since a cam drive method is employed to make the mechanism silent. Accurate rotation position control is performed by using a cam drive with a rotary encoder detected digital feedback servo.

(2) Since the leading time of the cam drive is slower when compared to that of the plunger method, problems will arise when attempting record/playback or stop at the designated tape position from FF or REW, since tape overrun occurs. This is especially important when controlling the recording from the position where the automatic tuning was completed.
(Erasing the previous music when making recordings after the automatic tuning is completed must be prevented.)
For this, the tape cuing is corrected after the automatic tuning is completed to control the tape position accurately.

(3) Power outage measures
When the power supply is cut off, the cam of the mechanism shifts to STOP.

(4) Overload measures of the cam
If the cam stops due to an overload for any reason and cannot shift to the target position within 4 seconds, it is immediately shifted to STOP. If this cannot be shifted within 4 seconds, the microcomputer will stop all controls and stop the motor to prevent a breakdown.

• Computer Tuning (CTS)

This tuning system automatically sets the equalizer and recording sensitivity, both of which are important to maximizing the performance of various tapes and to make high quality recordings. The tuning time is only 5 seconds; recording chances are not missed. When the cassette is loaded, the auto tape selector sets the deck to the standard optimum condition. Strictly speaking, however, the recording sensitivity and frequency characteristics of the tapes vary, depending on its type.

The computer tuning system allows the maximum performance of the tape to be heard and at the same time ideally corrects the frequency characteristics to a flat and wide range characteristic.

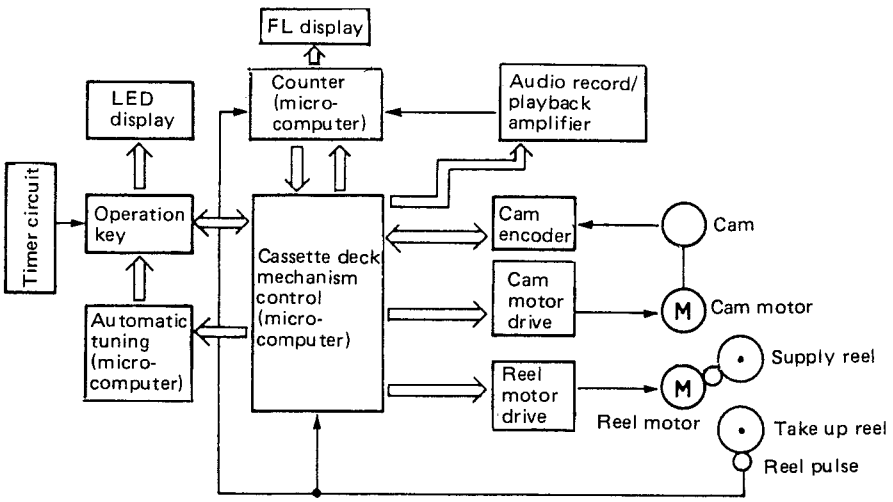

COMPUTER TAPE COUNTER

Controls and Indicators for the Computer Tape Counter

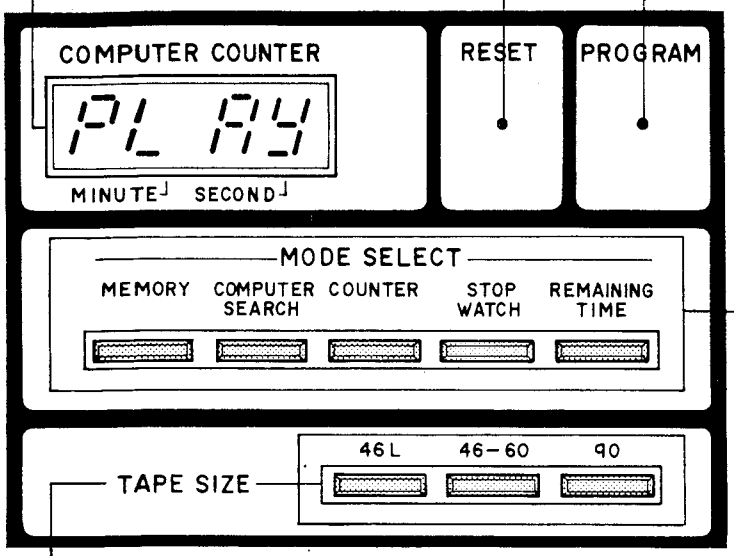

Four-digit fluorescent digital counter

RESET button: Operation of this button resets the counter to all zeros.

PROGRAM button: Press this button to search the desired selection in the "COMPUTER SEARCH" mode.

MODE SELECT switches: Use these switches to select the computer counter mode.
MEMORY: The tape stops when the counter indicates "0000" during fast forward or fast rewind.
COMPUTER SEARCH: Up to max. 20 music selections can be searched.
COUNTER: The counter functions as a 4-digit tape counter.
STOP WATCH: During recording or play-back operation, the tape running time is indicated.
REMAINING TAPE TIME: During recording or play-back operation, the tape remaining time is indicated.

TAPE SIZE switches: For a display of the remaining tape time, press the appropriate tape length switch, after setting the MODE SELECT switches to "REMAINING TIME".

■ Computer Tape Counter Operating Instructions

1) How to check remaining tape time

Remaining tape time can be checked during recording or play back.

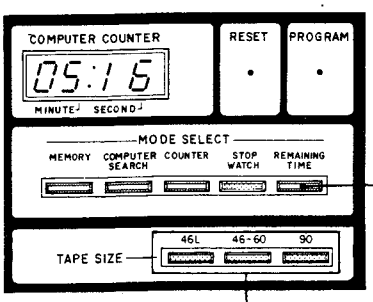

(1) Press the REMAINING TIME switch (▬).

(2) Press the appropriate switch for the length of the tape loaded.

When the tape starts running, the word "PLAY" is erased from the readout. After approximately five seconds the remaining time is displayed. (It takes this much time for the computer to compute the remaining tape time.) If the remaining tape time exceeds 6 minutes, the display is shown only in minutes. If the remaining tape time is less than 6 minutes, the display is shown in minutes and seconds.

∘ The remaining time counter on the DR-M4 can handle any tape length. Press the appropriate TAPE SIZE switch according to the following table:

Tape length	TAPE SIZE switch
C-90、C-84、C-80	C-90
C-60、C-54、C-50 C-46、C-30、C-15	C-46/60
C-46 large hub	C-46 L

For tapes other than those listed in this table, select the nearest position.

∘ Note that the large hub cassette used for some C-46 tapes has a larger-than-normal hub diameter as shown below:

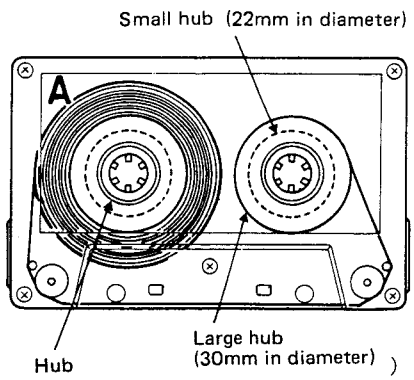

■ Remaining tape time display accuracy

The remaining tape time counter detects the number of supply reel rotations and computes the remaining time with its internal computer. Therefore, it is not necessarily as accurate as a clock. For the same nominal tape length, the counter may deviate from the actual recording or playback time due to variations in tape (tape base thickness, hub size, etc.).

- **Error range**

  Beginning of tape . . . . . Within 3 minutes
  End of tape . . . . . Within 30 seconds

- Since a 3 minutes error may occur at the beginning of tape, the tape time readout may not agree with the total time indicated on the cassette. Although the remaining tape time readout error lessens as the tape approaches the end, the tape may run out before the remaining time readout becomes zero (even if the recording is started from near the end of the tape.)

2) Tape counter operation

(2) Press the RESET button (The counter is reset to "0000").

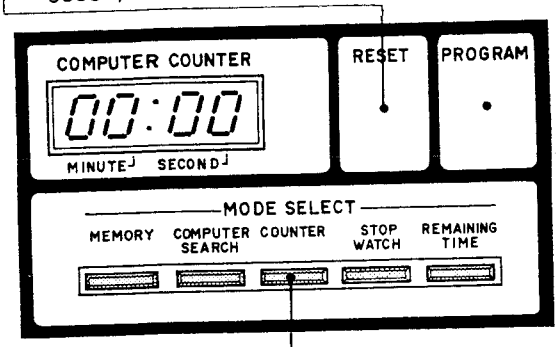

(1) Press the COUNTER switch (▬).

The tape counter can be used for easy reference, indexing of selections and precise program selection on any cassette.

- Once the POWER switch is off, the tape counter will read "0000" when the POWER switch is on again.
- The counter readout on the DR-M4 has no correlation with that on other type of deck.

3) How to use as a stop watch

During recording or playback, the tape running time is indicated in minutes and seconds.

(2) Press the RESET button (The counter is reset to "0000").

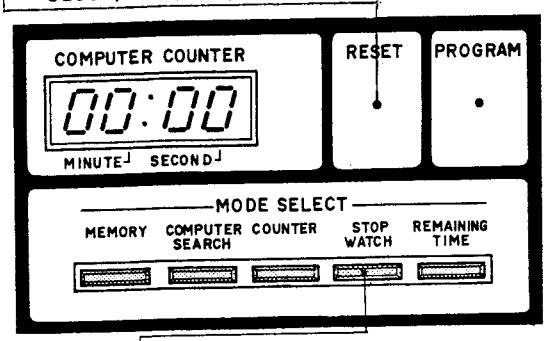

(1) Press the STOP WATCH switch (▬).

- The counter is reset to "0000" automatically by pressing the REW (◀◀) key or the FF (▶▶) key after recording or playback, by changing the position of the MODE SELECT switches or by setting the POWER switch to "OFF" and then to "ON".

4) How to use the memory stop

(3) Press the RESET button at the desired point for memory stop and reset the counter to "0000"

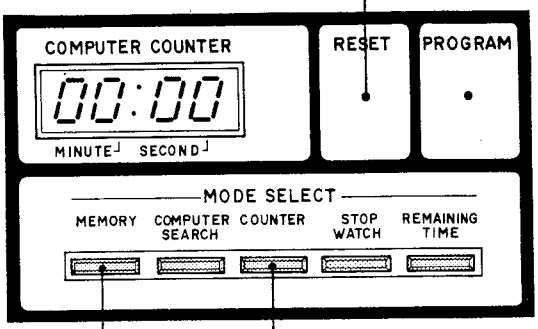

(2) Press the COUNTER switch (▬).

(1) Press the MEMORY switch (▬).

(4) Press the REW (◀◀) key after recording or playback is finished. Rewinding starts and will stop automatically when the counter indicates "0000".

- Memory stop functions also during fast forwarding. In this case the tape will automatically stop when the counter indicates "0000".
- Memory stop works with any position of the MODE SELECT switches.
- Set the MEMORY switch to OFF (▲) position if you do not want to use the memory function.
- The memory stop position error range is within plus minus 3 digit to the counter read out "0000".

5) How to use the computer search

(2) Set the number of the blank spaces on the counter.

(3) To reset the program, push this switch.

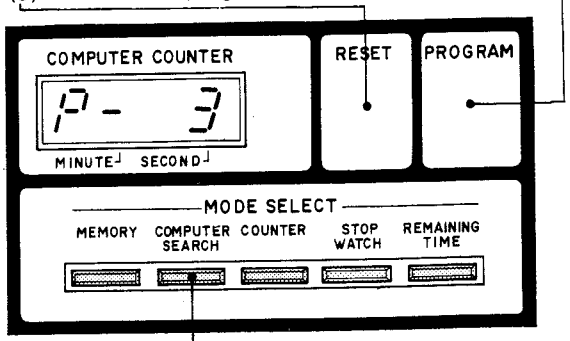

(1) Press the COMPUTER SEARCH switch (▬).

How to count the music selections

Computer search is done by detecting the blank spaces between the music selections. The number of blank spaces from the present tape position to the blank space before the desired selection have to be counted. Set this number on the counter by using the PROGRAM button.

Example

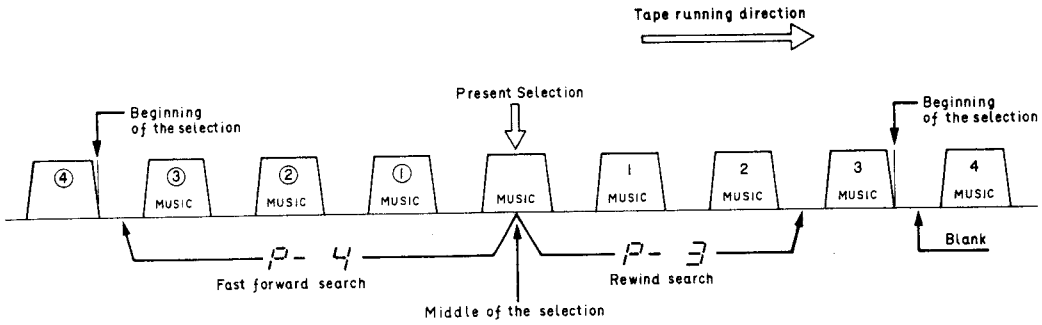

- In the example, there are 4 blanks between the present tape position and selection ④ ahead on the tape. This means that the counter should be set to "P- 4".
  However, there are 3 blanks between the present tape position and selection 2 back on the tape. So in this case the counter should be set to "P- 3".

* When searching in the fast forward direction, the present music should not be counted. Count to the desired music selection.
When searching in the rewind direction, the present music should be counted.

After setting the blank space's numbers on the counter . . . . . .

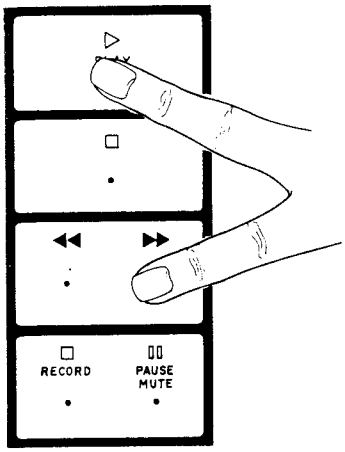

Press the FF (▶▶) key or the REW (◀◀) key while holding down the PLAY (▷) key.

- The computer search system operates by detecting blank spaces of sufficient length (more than 4 seconds). Under the following conditions, the system may malfunction.
  - If there are long unrecorded spaces or pianissimo (very soft sound) in the selection.
  - If the recording level was very low.
  - If the blank spaces are too short (less than 4 seconds).
  - If there happened to be loud noise or hum in the blank spaces.

DISASSEMBLY INSTRUCTIONS

1. How to Remove the Front Panel

(1) Unscrew the 4 screws (4x8 CTTS P tight) 306 from both sides of the top cover 217 and take off the top cover by pulling it up.

(2) Press the eject knob 204, open the cassette window 206 and take off the mechanism, as shown in the diagram.

Note: Be careful when handling the cassette window, as it is easily scratched.)

(3) Remove the connector (5P) with lead wires, which runs from the timer switch 243 to the rear of the logic circuit board 241, from the logic circuit board.

(4) The front panel can be removed by unscrewing the 3 upper screws (3x8 CFTS S tight) 303 from the front panel 202 and the 3 lower screws (3x8 CFTS P tight) 302.

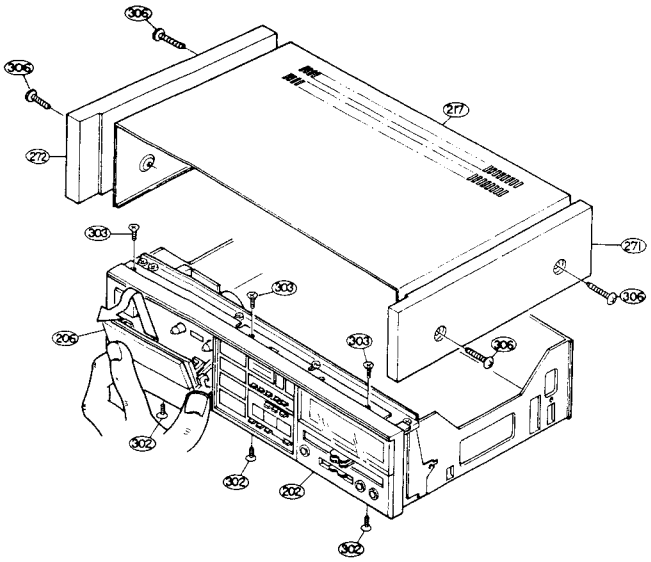

2. How to Remove the Mechanisms

(1) Remove the top cover 217 and the front panel 202. (Refer to section 1)

(2) Unscrew the 2 mechanism holding screws (3x6 CBTS S tight) 301 from the bottom surface of the chassis 218.

(3) Unscrew the 2 screws (3x6 CBTS S tight) 301 holding the angle 233 and the mechanism 201 and the 3 meter frame 223 and chassis holding screws (3x8 CBTS P tight) 304 and remove the angle.

(4) Remove the connectors with lead wires, which runs from the mechanism section, from the circuit board.

Audio circuit board side	2P connector CN101 CN201
	3P connector CN302
	4P connector CN301 CN303
Logic circuit board side	2P connector CN12 CN13
	4P connector CN6 CN9
	5P connector CN10
	6P connector CN11
Quartz locked circuit board side	4P connector CN903

Note: When assembling, check to make sure the connectors are inserted correctly.

(5) Pull out the power switch lever 234 from the power switch 245.

(6) The mechanism can be removed by holding the mechanism and pulling up.

Note: When assembling, do so after checking to make sure the 2 stay holes on the lower side of the mechanism unit are matched with the chassis protrusions.

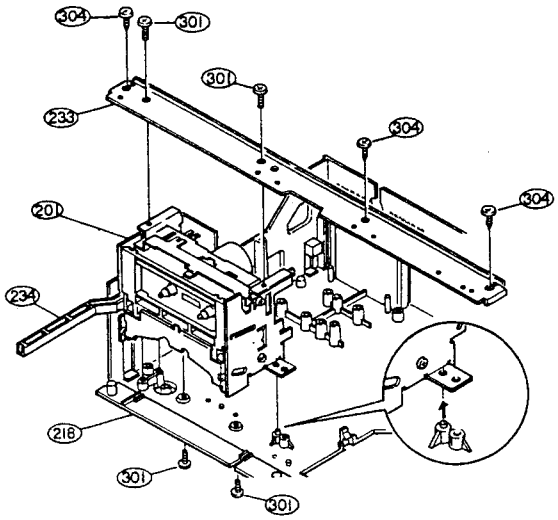

3. How to Remove the Control Circuit Board

(1) Remove the top cover 217 and the front panel 202. (Refer to section 1)

(2) Using a small minus screwdriver, loosen the 2 hooks on one side of the meter frame 223 which holds the control cover 207 and remove the control cover.

(3) Remove the connectors with lead wires which run from the control circuit board 258.

FL counter circuit board side	6P connector CN403
	7P connector CN404
Logic circuit board side	8P connector CN1
	4P connector CN2
CTS circuit board side	8P connector CN701

(4) By unscrewing 4 screw (3x8 CBTS P tight) 304 holding the control circuit board and loosening the 3 hooks on the left side of the meter frame, the control circuit board 258 can be removed.

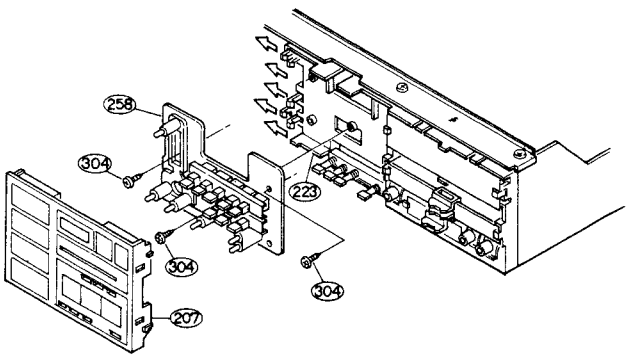

Note: When replacing the tact switch 261, always check to make sure that it is not floating above the circuit board. If it is floating, the switch will be in the on condition when the set is assembled.

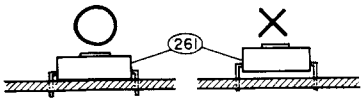

4. How to Remove the FL Meter

(1) Remove the top cover 217 and the front panel 202. (Refer to section 1)

(2) Remove the 12P and 4P connectors on the FL meter circuit board 256.

(3) By loosening the left/right hooks on the meter frame 223, which holds the FL meter, the color filter 225 and the FL meter can be removed together with the circuit board.

Note: The FL tubes are glass, be careful when handling.

5. How to Remove the FL Counter

(1) Remove the top cover 217 and the front panel 202. (Refer to section 1)

(2) Remove the 2P, 6P, 7P and 9P connectors from the FL counter circuit board 257.

(3) By unscrewing the 2 screws (3x6 CBS) 308 on the upper section of the FL counter, the FL counter can be taken out towards the back, together with the circuit board.

Note: The FL tubes are glass, be careful when handling.

6. How to Remove the CTS Circuit Board

(1) Remove the top cover 217. (Refer to section 1)

(2) The CTS circuit board 255 can be removed upwards by pulling it upwards and loosening the 2 hooks on the chassis 218.

7. How to Remove the Audio Circuit Board

(1) Remove the top cover 217 and the front panel 202. (Refer to section 1)

(2) Unscrew the lower screw 301 holding the mechanism and the chassis. (Refer to section 2)

(3) Remove the angle 233. (Refer to section 2)

(4) Remove the control circuit board 258, FL meter 256 and the FL counter 257.(Refer to sections 3, 4, 5)

(5) Remove the connectors from the audio circuit board 247.

(6) Remove the CTS circuit board 255. (Refer to section 6)

(7) Unscrew the 2 bottom cover holding screws (3x8 CBTS P tight) 304 on the back side of the chassis and remove the bottom cover 239.

(8) Unscrew the screw 304 holding the Audio amp circuit board.

(9) By lifting the meter frame 223 and loosening the 2 hooks on the chassis holding the audio circuit board 247, the audio circuit board can be removed.

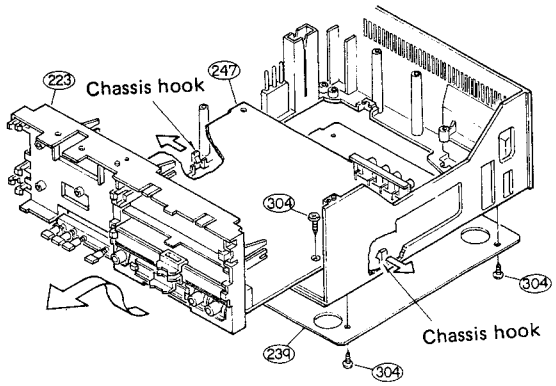

When Separating the Audio Circuit Board by Itself

(10) Remove the mask sheet 226 and 267 from the meter frame.

(11) Loosen the hook on the left side of the meter frame holding the longer rail 213 and remove the guide rail together with the knob 215.

(12) Unscrew the 2 screws (2.6x5 CBS) 307 holding the input volume 254 and loosen the 2 rear hooks and remove the input volume toward the rear.

(13) Loosen the hook on the right side of the meter frame holding the shorter guide rail 214 and remove the guide rail together with the knob 215.

(14) Unscrew the 2 screws (3x6 CBS) 308 holding the output volume 248.

(15) Pull down the steel mounts holding the microphone jack 249 and the headphone jack 250.

(16) Unscrew the 2 screws (3 x 8 CBTS P tight) 304 holding the CUE circuit board 269.

(17) By removing the meter frame 223, the audio circuit board can be removed by itself.

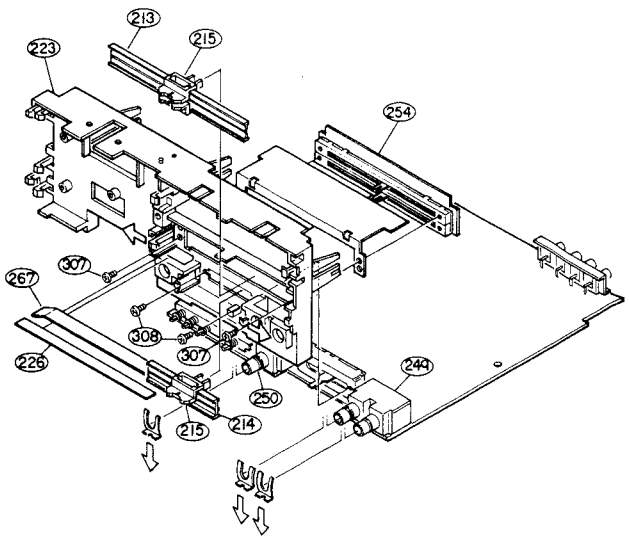

Note: Most repairs to the audio circuit board can be performed by removing the bottom cover on the chassis. Refer to the above procedure only when necessary.

When reassembling, follow the procedures in reverse order; however, if each of the various parts are not assembled properly in their respective positions, the set cannot be assembled. When assembling, check the work of each step carefully.

8. How to Remove the Logic Circuit Board

(1) Remove the top cover 217. (Refer to section 1)
(2) Remove the CTS circuit board 255. (Refer to section 6)
(3) Remove the various connectors from the logic circuit board 241.
(4) Unscrew the 2 screws (3x8 CBTS P tight) 304 holding the logic circuit board.
(5) Unscrew the screw (3x10 CBTS P tight) 305 holding the P.W.B support 266.
(6) Pull the logic circuit board 241 forward until the remote jack 242 is disconnected from the rear of the chassis 218; it can then be removed.

9. How to Remove the Power Supply Circuit Board

(1) Remove the top cover 217. (Refer to section 1)
(2) Unscrew the 1 screw (3x8 CBTS P tight) 304 holding the bracket 221 of the power supply circuit board 244.
(3) By pulling the power switch lever 234 out of the power supply switch, the power supply circuit board can be removed upwards.

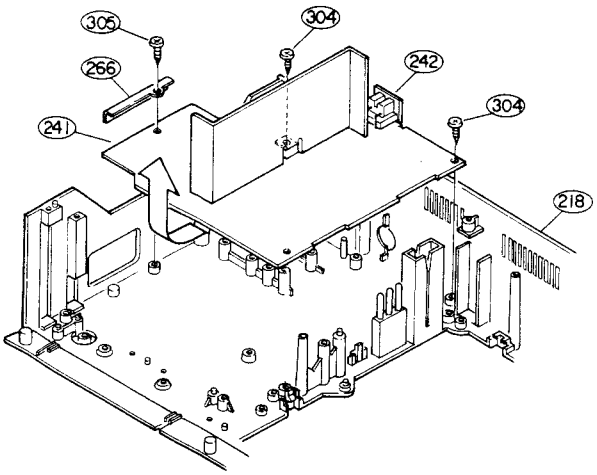

ADJUSTING AND CHECKING THE MECHANISM SECTION

1. Replacing the Pinch Roller 23 and 104

Before replacing the pinch roller, clean the tape contact surface of the pinch roller and the capstan shaft.
Most causes of poor tape transport can be traced to dirty pinch rollers and capstan shafts.
The right side pinch roller 23 can be taken out by removing spring 24 and slit washer 317 . In the same manner, the left side pinch roller 104 can be taken out by removing spring 106 and slit washer 317. After replacing, play a padless C-90 tape and check for tape curls at the head tape guide section.
In addition, in the playback mode, check to make sure that the right side pinch roller contacts the capstan shaft before the left side pinch roller contacting.

Correct

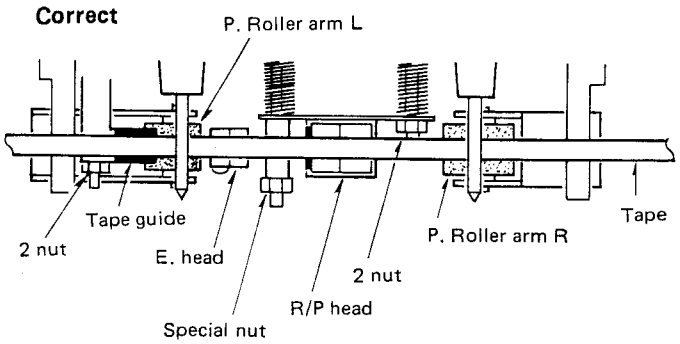

Defective

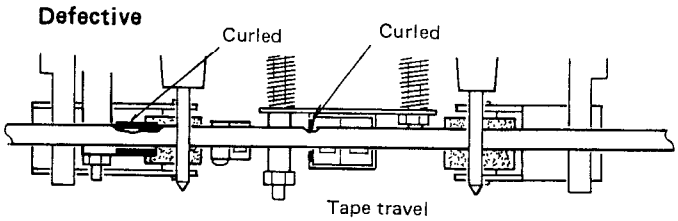

2. Checking the Pressure Force of the Pinch Roller

In the playback mode, hook a spring weight onto the bracket at the center of the pinch roller. After separating the pinch roller from the capstan shaft, allow the pinch roller to contact the capstan shaft again. When the pinch roller starts to rotate, check to make sure the rod type spring weight reading is 350g–450g for the right side and 200g–300g for the left side.
If it is not within the normal range, replace the pinch roller spring 24 or 106 .

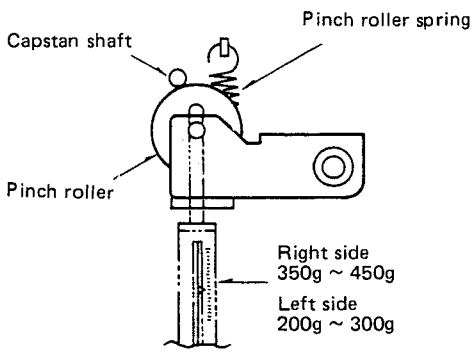

3. Replacing the Record/Playback Head

* Before replacing, remove the front panel 202.

(1) How to remove the R/P HEAD.
1) Unscrew the recording head holding screw 312.
2) Next, take out the azimuth adjustment NUT 311 and the height adjustment ORDER SCREW 10 loosening them alternately.
If they are not loosened alternately, the R/P HEAD base may become warped.
3) By unsoldering the HEAD WIRES on the circuit board section of the R/P HEAD, the entire R/P HEAD can be taken off the mechanism unit.

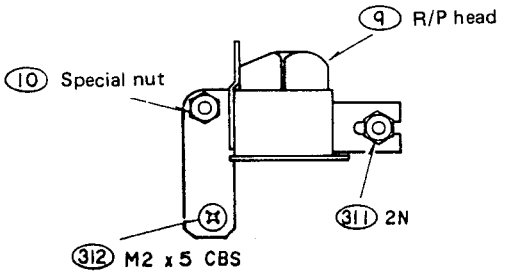

(2) How to assemble the R/P HEAD.
Reverse the above (1) procedures for removing the R/P HEAD.

* Solder the HEAD WIRES according to the diagram above.

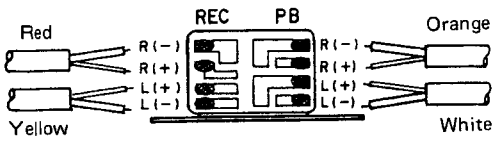

4. Adjusting the R/P HEAD

(1) Height adjustments (Use the head adjusting jig M-300)
Set the M-300 tool plate on the mechanism unit; turn the height adjustment ORDER SCREW 10 and adjust so that the 3.8 mm measure section of the M-300 (tool grip) can pass without contacting the tape guide of the R/P HEAD 9..

* Only the height adjustment is necessary; no tilt ajustments are required.
* When adjusting the height, make sure the R/P HEAD is not tilted by turning the azimuth adjustment nut, and checking with your eyes.
* Never allow the M-300 (tool grip) to hit the tape contact surface of the R/P HEAD strongly. It may scratch the surface.

(2) Azimuth adjustments
Play back the TEAC MTT-114 test tape. Turn the azimuth adjustment nut and adjust so that A of the resurge wave form is maximum and B is minimum. After the azimuth adjustments, re-check the head height with the M-300 to make sure the height has not deviated.

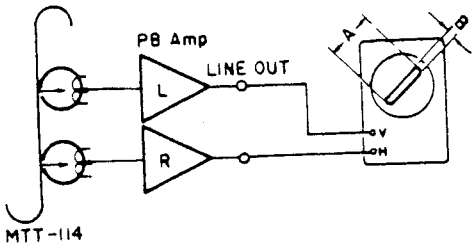

* After the adjustments, apply anaerobic adhesive on the positions indicated in the diagram.

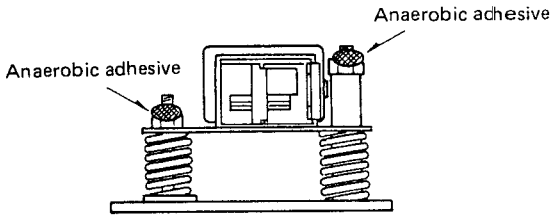

5 . Replacing the ERASE HEAD 15

The erase head can be replaced by unscrewing the erase head holding screw 331 . After installation, apply anaerobic adhesive to the holding screw. The construction of the mechanism is such that no height adjustments are necessary.

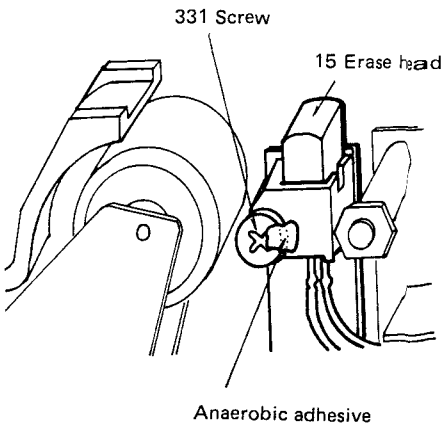

6. Height Adjustment of the Tape Guide 103

Set the M-300 jig plate onto the mechanism unit and adjust the height by rotating the height adjustment nut 311 so that the 3.8mm section of the M-300 jig can pass through without contacting the tape guide section of tape guide 103 .

7. Thrust Play Check and Adjustments of the Capstan Shaft

Thrust Play check and Adjustments of the Capstan Shaft 45 , 111. From the front of the mechanism, grasp the capstan shaft and move back and forth in the axis direction, Check to make sure there are thrust play in the right side capstan shaft 45 . Rotate and adjust capstan support 110 so that the range of the thrust play of the left side capstan shaft 111 is within 0.2mm–0.4mm. After adjusting, apply anaerobic adhesive to the capstan support 110 .

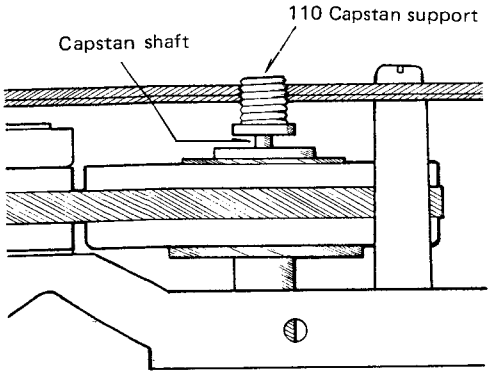

8. Checking the Take-up Torque

Load the cassette type torque meter. Check to make sure that the torque meter average reading is within 35~65 g-cm during playback. If it is not within this range, check the voltage (5.1 ~ 5.3V) of the reel motor. If the voltage is low, the torque will be weak; if it is high, the torque will be strong. In addition, check for reel thrust movement in section 9.

9. Adjusting the Reel Thrust Movement

Check to make sure that the reel thrust movement is within 0.2–0.4 mm.

10. Checking the FF and REW Torques

* When using the cassette type torque meter.
  Check to make sure the torque meter indicates more than 70 g-cm at the end of FF and REW.
* When using a modified cassette half.
  Load the modified cassette half; hook the end of the dial tension meter (full scale 100–300 g) onto the triangle section. In the FF (REW) mode, feed the tape in at a rate somewhat slower than the take up speed. Check to make sure the dial tension meter reads more than 60 g-cm.

11. Checking the Back Tension Torque During Record/Playback

Load the cassette type torque meter; check to make sure the torque meter reads between 7 ~ 10 g-cm during playback and that there is no unevenness.
If it is not within this range, check the section on adjusting the reel trust movement; or replace the spring 109.

12. Checking the FF and REW Times

Load a C-60 cassette tape; check to make sure the tape is fast forwarded or rewound within 70–110 seconds. If it is not within this range, check sections 9 and 11.

13. Checking the Operation of the Erase Prevention, Metal and Chrome Switch Operation Arms

Check to make sure the operation arms 58, 59 operate the switches positively, depending on whether or not there are holes.

14. Checking the EJECT Switch 75

To check the operation of the EJECT SW with only the mechanism unit, make sure the hook lever A 65 operates the switch positively when the EJECT lever 64 is operated.

15. Checking the Gap Between the Pulse Detection LED and the Reel Ass'y

Check to make sure the gap between the surface of the shutter section of the reel ass'y and the LEDs is approximately 1 mm.

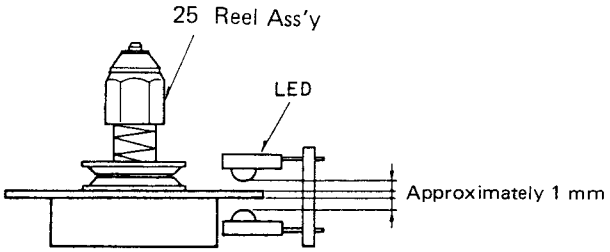

ADJUSTING THE ELECTRICAL SECTIONS

- **Measuring instruments necessary for adjustments**

(1) Audio signal generator
(2) Variable resistance attenuator
(3) Vacuum tube voltmeter
(4) Oscilloscope
(5) Frequency counter
(6) Adjustment screwdriver
(7) Trap coil adjustment square stick
(8) Test tapes (TEAC MTT-111, MTT-114, MTT-150,
(A-BEX TCC-262)
(DENON DX 3, DXM, DX7/50N, LX)
(9) Transport Check cassette tape
(COLUMBIA C-120, modified)

- **Cautions on adjusting**

(1) Before adjusting, clean the head surface, capstan and the pinch roller with a gauze or a cotton swab moistened with alcohol.
(2) Demagnetize the R/P HEAD and the E. HEAD with a head eraser.
(3) Completely demagnetize the adjustment screwdriver.
(4) Unless instructed otherwise, set the various controls as follows:
- INPUT volume . . . . . maximum
- OUTPUT LEVEL volume . . . . . maximum
- DOLBY NR switch . . . . . OFF
- MONITOR switch . . . . . TAPE

1. Tape Transport Check

Load the transport check cassette. In the operational mode, illuminate the fixing guides of the R/P HEAD with a lamp and check to make sure the tape edge does not come in contact with the tape guide section.
The tape transport is the most important element in determing the performance of a cassette deck.
Avoid moving the various adjustment screws, nuts, etc., as much as possible. Refer to the pages on "Adjusting and Checking the Mechanism Section" when replacing or adjusting the R/P HEAD.

2. Adjusting the Azimuth

(1) After completing the tape transport check, load the test tape (TEAC MTT-114).
(2) Play back the test tape; adjust the azimuth screw so that section A of the resurge wave form is maximum and section B is minimum.

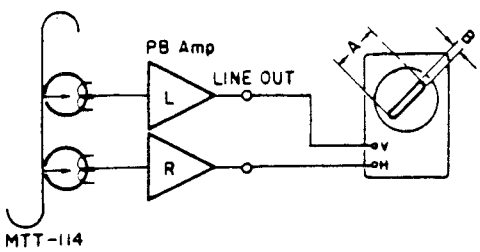

3. Checking and Adjusting the Tape Speed

1) Adjusting the lock position
Measure the T.P. of KU-0456 (QUARTZ LOCK UNIT) with the oscilloscope and adjust VR 901 of KU-0455 (CAPSTAN SERVO UNIT) so that the duty is 50% (555 Hz).
At this time, LE 951 (red LED) of KU-0456 will be turned off.
2) Connect the frequency counter to the LINE OUT terminal and play back the test tape (TEAC MTT-111). Check to make sure the frequency counter reading is in the range of 3,000 Hz ± 6 Hz.

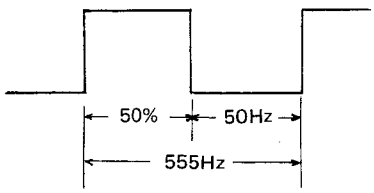

4. Adjusting the Input Sensitivity

(1) Set the MONITOR switch to SOURCE position, the operational mode at STOP. Supply a 400 Hz signal to the LINE IN terminal and set the input signal level (approx. –20 dB) so that the output level at the LINE OUT TERMINAL (L ch) becomes 0dB.
(2) At the same time, check to make sure the R ch output level is also 0dB.

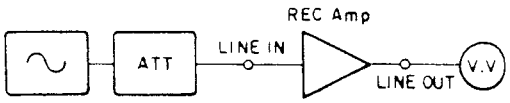

5. Checking the Operation of the DOLBY

Set the MONITOR switch to SOURCE. When a –41dB signal input is made to the LINE IN terminal, check to make sure the output frequency response from the LINE OUT terminal meets the specification in the diagram below.

Dolby C Back to Back Frequency Response

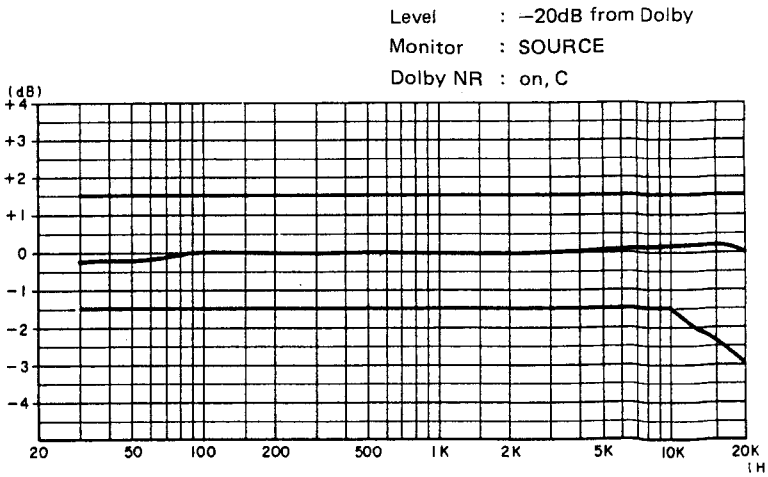

6. Adjusting the Playback Section

(1) Adjusting the playback level
Play back the Dolby standard level test tape (TEAC MTT-150) and adjust Vr 101 (L ch), Vr 201 (R ch) so that the LINE OUT voltage becomes 0 dB (0.775 V).

(2) Adjusting the playback frequency response
Play back the test tape (A-BEX TCC-262) and (check to make sure that the frequency response meets the specifications in the diagram.

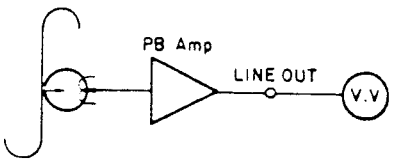

Playback Frequency Response

Tape : A-BEX TCC-262
When using MTT-316 make corrections along.

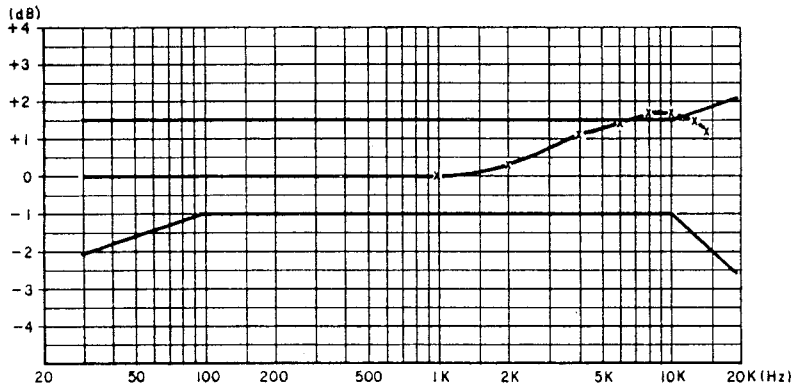

7. Adjusting the FL Meter

After adjusting the playback level, play back the test tape (TEAC MTT-150) and adjust VR 801 (L ch), VR 802 (R ch) so that the FL meter indicates 0dB when the LINE OUT terminal level is 0dB (0.775V).

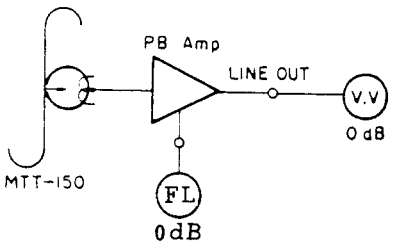

8. Adjusting the Recording Section

(1) Adjusting the record/playback overall frequency response.
1) Load the test tape DX7/50N; record a signal with an input level of −41 dB, 1 KHz at the LINE IN terminal; play back this recording.
2) Change the frequency of the input signal to 12kHz, record and playback; adjust VR 103 (L ch), VR 302 (R ch) so that the characteristic standards meet the following diagram when compared to the 1kHz signal output level.

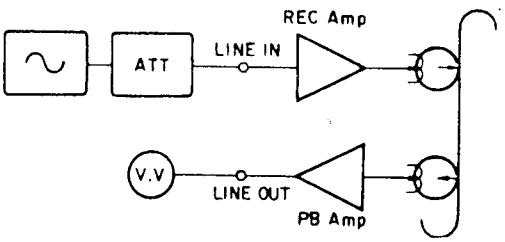

Record/Playback Overall Frequency Response

Tape : DX7N
Dolby : off
Level : −20dB from Dolby

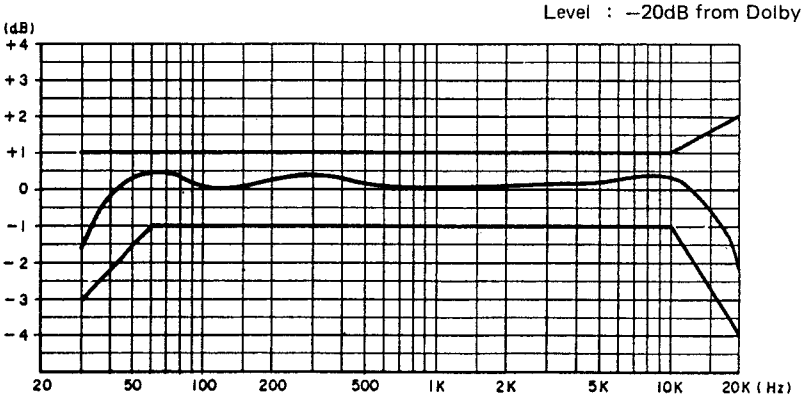

(2) Adjusting the record/playback levels
   1) Load the test tape DX7/50N and record a signal of 1 KHz (−41 dB).
   2) Adjust Vr 102 (L ch), Vr 202 (R ch) so that the output level is the same when the MONITOR switch is switched from SOURCE to TAPE position.

(3) Checking the Dolby C record/playback overall frequency response
   1) Set the DOLBY NR switch to the "C" position.
   2) Using the test tapes DXM, DX7/50N, DX-3, perform record/playback in the same manner as 8-(1).
   3) Check to make sure that the record/playback overall frequency response meets the specifications in the diagram.

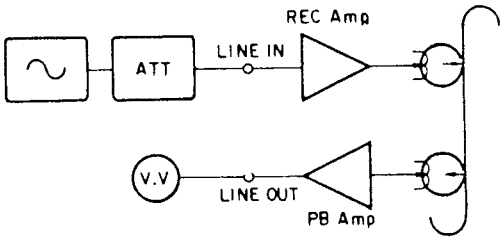

Dolby C Record/Playback Overall Frequency Response.

Tape : DX7N
Dolby : on, C
Level : −20dB from Dolby

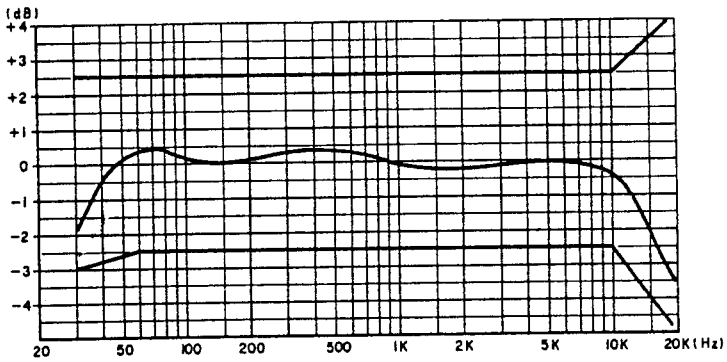

9. Adjusting the CTS

(1) Adjusting the CTS Amplifier Gain
Set the switch S701 of the CTS circuit board to the TEST side and press the CTS START button. During its operation, adjust VR 501 (L ch), VR 601 (R ch) so that the levels at TP(L), TP(R) alternates frequently between H → L or L → H.

(2) Checking the CTS Operation
   1) Load the LX-C60 cassette tape. Light the preset lamp and set to the preset mode. Record/playback 1kHz and 12kHz signals and note the frequency response.
   2) Press the CTS START button. After it is completed, (CTS lamp lit), record/playback the 1kHz signals and check to make sure the frequency response is improved over those recorded in section (1).

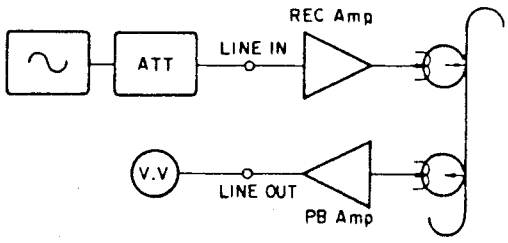

- **Beat Interference**

Beat interference may result if the unit is used close to an AM tuner. In this case separate the distance between the tuner and the cassette deck.

PARTS LIST OF MECHANISM UNIT

Ref. No.	Part No.	Part Name	Remarks
1	4118339203	MECHA BASE ASS'Y	
3	4318076308	HEAD SLIDER ASS'Y	
4	4318078403	HEAD PLATE ASS'Y	
5	4258011009	φ3 STEEL BALL	
6	4318080200	BALL GUIDE PLATE	
7	4638230002	SPRING	
8	4638819009	SPRING	
9	3918076107	R/P HEAD	
10	4438671104	SPECIAL NUT	
11	4418994102	CORD HOLDER	
15	3918825002	E-HEAD	
20	4338224208	STOPPER	
23	4338194105	P-ROLLER ARM ASS'Y	
24	46388247008	SPRING	
25	4218320109	REEL ASS'Y	
26	4638624100	SPRING	
27	4338199003	FRICTION PLATE	
28	4418961300	LAMP HOLDER	
29	4338238304	I. ARM (B) G ASS'Y	
30	4338239109	IDLER ARM (B) ASS'Y	
31	4218324202	IDLER ASS'Y	
32	4618126107	FRICTION FELT	
33	4638625206	SPRING	
34	4428029106	THRUST WASHER	
35	4338236209	IDLER ARM (A) ASS'Y	
36	4638244108	SPRING	
37	2178079000	DC MOTOR ASS'Y	
39	4418962105	DC MOTOR FIX PLATE	
40	4318081306	BRAKE	
41	4618127106	BRAKE SHOE	
42	4638234105	SPRING	
43	4338232203	BRAKE ARM ASS'Y	
44	4438648205	METAL HOUSING ASS'Y	
45	4218355006	CAPSTAN WHEEL SUB ASS'Y	
46	2228530004	FG PATTERN P.W.B.	
47	4428041003	BACK PLATE	
48	4438650303	CAPSTAN STOPPER	
49	3468148307	STATOR COIL	
50	4770090074	WASHER	
51	2760303016	HL-300C	
52	4418966208	CAM MOTOR HOLDER	
54	2178080206	CAM MOTOR ASS'Y	
55	4248027304	CAM	
57	4428018104	ENCORDER BRACKET	
58	4338225304	HOLE SENSOR (1)	
59	4338226400	HOLE SENSOR (2)	
60	4338227302	LEVER	
61	4638240005	SPRING	
62	4418969409	RIGHT STAY ASS'Y	
63	4418971303	LEFT STAY ASS'Y	
64	4338216203	EJECT LEVER	
65	4338218201	HOOK LEVER (A)	
66	4338219200	HOOK LEVER (B) ASS'Y	
67	4638238004	SPRING	
68	1038212306	CASSETTE BOX (A)	
69	4338215408	CASSETTE BOX (B)	
70	1038213004	CASSETTE SUPPORT (L)	
71	1038219105	CASSETTE SUPPORT (R)	
72	4438654202	COLLAR	
73	4638236103	BOX SPRING	
74	4698013104	AIR DUMPPER	
75	2129200006	SLIDE SWITCH	
76	1448508105	ESC PLATE	
77	3939179009	LED	
78	4458004007	WIRE CLAMPER	
79	KU-0455	CAP SERVO UNIT	
80	2123331201	ROTARY ENCORDER	
81	393917800	LN25RCP	
82	3939026000	PN150	
83	2129201005	SLIDE SWITCH	
84	4618132007	CUSHION	
101	4418959202	E. HEAD BASE	
102	4638621103	SPRING	
103	4338193009	TAPE GUIDE	
104	4338196006	P. ROLLER ARM L ASS	
105	4338198004	P. ROLLER ARM PLATE	
106	4638232000	SPRING	
107	4338201205	BACK TENSION ARM	
108	4618125108	FRICTION FELT	
109	4638233106	SPRING	
110	4258009008	CAPSTAN SUPPORT (B)	
111	4218365203	CAPSTAN WHEEL ASS	
112	4238026108	BELT	
301	4737002005	3x6 CBTS (S)	
303	4737003004	3x8 CFTS (S)	
307	4713202010	2.6x5 CBS	
310	4713208027	2.6x14 CBS	
311	4756020000	2N	
312	4713102013	2x5 CBS	
313	4713201011	2.6x4 CBS	
314	4770090003	WASHER	
315	4751119107	SLIT WASHER	
317	4751121108	SLIT WASHER	
318	4737500002	3x6 CBTS (P)	
319	4761000002	1.5E-RING	
320	4713802012	2.6x3 CBS	
321	4751120109	SLIT WASHER	
322	4713801039	2x3 CBS	
323	4761003009	3E-RING	
325	4713801026	2x14 CBS	
326	4713204018	2.6x8 CBS	
327	4730154028	2x8 CRTS	
330	4770090016	WASHER	
331	4713205017	2x10 CBS	

PARTS LIST OF EXPLODED VIEW

Ref. No.	Part No.	Part Name	Remarks
201	3388012005	V. MECHA. [51] UNIT	
202	1038214553	FRONT PANEL ASS'Y	
203	1138156304	PUSH KNOB (A)	
204	1138157413	PUSH KNOB (B)	
205	4638627000	SPRING	
206	1038217330	CASSETTE WINDOW	
207	1038224213	CONTROL COVER ASS'Y	
209	1168005108	CONTROL SHEET	
210	1138158205	PUSH KNOB (C)	
211	1138159327	PUSH KNOB (D)	
212	1138159330	PUSH KNOB (D)	
213	1198009420	GUIDE RAIL	
214	1198009433	GUIDE RAIL	
215	1138160219	SLIDE KNOB (A)	
216	1138155101	SLIDE KNOB (B)	
217	1028319219	TOP COVER	
218	4118341505	CHASSIS	
	4118341518	CHASSIS	E1 only
219	4610162004	FELT PAD	
220	4118342300	TRANS BRACKET	EU, EC, E1
	4118342313	TRANS BRACKET	E2, EA, EF, EG, EK
221	4118343202	POWER SW BRACKET	
222	1038225102	P.S. LEVER GUIDE	
223	4118344308	CONT. & METER FRAME	
224	4118345307	SHIELD PLATE	
225	1298019307	COLOR FILTER	
226	1298022006	MASK SHEET	
227	1198010202	DUMMY BLOCK (A)	PLAY, STOP
228	1198011308	DUMMY BLOCK (B)	REC. PAUSE FF. REW
229	1198015003	DUMMY BLOCK (F)	RESET. PROGRAM
230	1198013209	DUMMY BLOCK (D)	CTS START
231	1198014208	DUMMY BLOCK (E)	MEMORY/PRESET
232	4128747005	SHIELD BRACKET	
233	4118346102	ANGLE	
234	4318082402	POWER SW LEVER	
235	4118347101	EARTH PLATE (A)	
⚠ 236	2339064003	POWER TRANS	EU, EC
	2339068009	POWER TRANS	E2, EF, EG
	2339071009	POWER TRANS	E1
	2339072008	POWER TRANS	EA, EK
⚠ 237	2062019008	AC CORD WITH PLUG	EU, EC
	2062002031	AC CORD	E2, EF, EG
	2006031026	AC CORD	E1
	2006019310	AS 3P AC CORD	EA
	2062024006	AC CORD WITH LABEL	EK
⚠ 238	MD-3802	BUSHING	EU, EC, E1
	4450018004	BUSHING	E2, EF, EG, EK
	MD-2982	CORD BUSH	EA
239	1058089108	BOTTOM COVER	
240	KU-0449-6	PWR & LOGIC UNIT	
241	KU-0449 A	PWR & LOGIC ASS'Y	

Ref. No.	Part No.	Part Name	Remarks
242	2048110002	8P DIN JACK	
243	KU-0449 B	TIMER SWITCH ASS'Y	
⚠ 244	KU-0449 C1	POWER SW. PWB UNIT	EU, EC
	KU-0449 C2	POWER SW. PWB UNIT	E2, E1, EA, EF, EG, EK
⚠ 245	2129136028	POWER SWITCH	EU, EC
	2129136015	POWER SWITCH	E2, E1, EA, EF, EG, EK
246	KU-0450-2	AUDIO UNIT	
247	KU-0450A2	AUDIO ASS'Y	
248	2118071107	J3020V20DA103	OUTPUT VR
249	2048108014	MIC-JACK	
250	2048109013	HEADPHONE JACK	
251	2048114008	4P PIN JACK	
252	2129189004	PUSH SWITCH	
253	KU-0450B	INPUT VR ASS'Y	
254	2118072106	J10002H10CA503	INPUT VR
255	KU-0451	CTS UNIT	
256	KU-0452	FL METER UNIT	
257	KU-0453-1	FL COUNTER UNIT	
258	KU-0454-2	CONTROL UNIT	
259	2129213103	PUSH SWITCH	
260	2129192004	PUSH SWITCH	
261	2124388004	TACT SWITCH	
262	3939180001	LED (RED)	
263	3939181000	LED (AMBER)	
264	3939182009	LED (GREEN)	
266	4428055002	P.W.B SUPPORT	
267	1298022019	MASK SHEET	
268	2123315023	VOLTAGE SELECTOR	E1 only
269	KU-0450C	CUE ASS'Y	
270	KU-0456	QUARTZ LOCKED UNIT	
271	1018389000	WOOD BOARD (R)	EU, EC only
272	1018390002	WOOD BOARD (L)	EU, EC only
301	4737002005	3x6 CBTS (S)	
302	4737500028	3x8 CFTS (P)	
303	4737003004	3x8 CFTS (S)	
304	4737500015	3x8 CBTS (P)	
305	4737501001	3x10 CBTS (P)	
306	4737503025	4x8 CTTS (P)	
	4737504008	4x20 CTTS (WAVE)	EU, EC only
307	4713203019	2.6x5 CBS	
308	4713303016	3x6 CBS	
309	4730359014	3x16 CRTS (2)	E1 only
310	4737002018	3x8 CBTS (S)	

ACCESSORIES GROUP

Ref. No.	Part No.	Part Name	Remarks
	2032101001	2P CONNECTOR CORD	
	5118236004	INS. MANUAL	
	5118153006	SAFETY INSTRUCTION	
	5158053001	WARRANTY IN ENVE-LOPE	

CARTON CASE GROUP

Ref. No.	Part No.	Part Name	Remarks
	5018298003	CARTON CASE	EU, EC only
	5018291026	CARTON CASE	
	5038048000	PACKING	EU, EC only
	5038042006	PACKING	
	5058092007	RAMINATE COVER	

Remarks symbols in the parts list refer to the following countries and areas.

EA : Australia
EK : United Kingdom
EU : U.S.A.
E1 : Multiple voltage model
E2 : European continent
EF : French
EG : German
EC : Canada

WARNING:
Parts marked with ⚠ and/or shading have special characteristics important to safety. Be sure to use the specified parts for replacement.

KU-0455 CAPSTAN SERVO UNIT

Ref. No.	Part No.	Part Name	Remarks
SEMICONDUCTOR GROUP			
IC901	2630224005	μPC1043C	
IC902	2630189001	M5218L	
TR904,906	2720055029	2SB772Q/P	
TR901,902	2730204035	2SC2320E/F	
TR903,905	2740078031	2SD882Q/P	
HE901,902	2760303016	HL-300C	
RESISTOR GROUP			
R908	2452231001	RN14K2E104G	Metal film 100KΩ
VR901	2116020011	K08Q06MB503	Variable resistor 50KΩB
CAPACITOR GROUP			
C906	2533643000	CC45SL1H471J	470PF 50V
C910	2539013003	CK45=1E473M	0.047μF 25V
C901,902	2539014002	CK45=1E683M	0.068μF 25V
C912	2531055056	CK45B1H221K	220PF 50V
C905	2544129005	CE04W1A470=	Electrolitic 47μF 10V
C903,913	2544132005	CE04W1C100=	10μF 16V
C904	2544140000	CE04W1V4R7=	4.7μF 35V
C911	2544146004	CE04W1H010=	1μF 50V
C907	2551069006	CQ93M1H562K	Film 0.0056μF 50V
C914,915	2551076002	CQ93M1H223K	0.022μF 50V
C908	2554194046	CQ93P1H223J	0.022μF 50V
OTHER PARTS GROUP			
CN901	2032075001	2P CONNECTOR BASE	
CN902	2031639008	4P EI CON WITH WIRE	
CN903	2035622024	4P MINI CONN. PIN	
CN904	2041630000	5P EI CON WITH WIRE	KU-0455B
CN905	2041632008	6P EI CONNE WIRE	KU-0455C
LE4,6	3939178000	LN25RCP	"
PTR1,2	3939026000	PN150	"
CN906	2031638038	2P EI CON WITH WIRE	KU-0455D
CN907	2031639024	4P EI CON WITH WIRE	"

• The carbon resistors rated at ¼W are not listed herein.

KU-0449A POWER AND LOGIC UNIT

Ref. No.	Part No.	Part Name	Remarks
SEMICONDUCTOR GROUP			
IC1	2620408006	UPD 1511C-097	
IC2	2620229007	M74LS138P	
IC3, 4	2620197003	M74LS32P	
IC5, 6	2620326007	BA6109	
IC7	2630225004	NJM78M09A	
TR1~3	2710102034	2SA1015Y/GR	
23, 22			
TR19	2710105002	2SA966Y	
TR23	2720055029	2SB772Q/P	
TR4~10	2730245023	2SC2603E/F	
14~16			
24~27			
TR17,18,20	2740078031	2SD882Q/P	
DB1, 2	2760246005	RB152	
D18~21	2760237001	RV06	
24~28			
ZD1, 9	2760185027	HZ4B2	
ZD3	2760236057	HZ5C3	
ZD2	2760173097	HZ6A1	
ZD7	2760173042	HZ6B1	
ZD4, 6	2760173071	HZ6C3	
ZD5	2760218046	HZ9B1	
ZD8	2760052079	HZ11B2	
ZD10	2760299052	HZ3B3	
D1~12	2760049008	IS2076	
14~17			
22, 23			
RESISTOR GROUP			
			Carbon film
R42	2442028017	RS14B2E330JFRF	33Ω ¼W
R30	2440029021	RS14B3A101JNBF	100Ω 1W
R29	2440079026	RS14B3D270JNBF	27Ω 2W
			Resistor block
RB-1	2462011046	RK99=2B472MP3	3.7KΩ ¼Wx3
RB-4	2462011075	RK99=2B103MP3	10KΩ ¼Wx3
RB-2	2462012003	RK99=2B103MP8	10KΩ ¼Wx8
RB-3	2462011088	RK99=2B153MP3	15KΩ ¼Wx3
RB5, 6	2462010092	RK99=2B104MP4	100KΩ ¼Wx4
CAPACITOR GROUP			
			Ceramic
C9, 11	2539013003	CK45=2E473M	0.047μF 25V
C6	2539014002	CK45=1E683M	0.068μF 25V
C1, 2, 8	2531024003	CK45F1H103Z	0.01μF 50V
10,12,25			
C4	2533627000	CC45SL1H101J	100PF 50V
C5	2533635005	CC45SL1H221J	220PF 50V
CB-2	2531153000	CK99B1H102MP4	0.001μF 50V
CB-1	2610036006	CK93F1H03ZF6	0.01μF 50V
			Electrolitic
C13, 16	2544009002	CE04W1A470=	47μF 10V
C15, 24		CE04W1A101=	100μF 10V
26,27,31,33			
C7	2544132005	CE04W1C100=	10μF 16V
C28	2544018006	CE04W1C101=	100μF 16V
C20, 21	2544163003	CE04W1C221M	220μF 16V
C23,29,30	2544163032	CE04W1C102M	1000μF 16V
C22	2544088007	CE04W1C222M	2200μF 16V
C14	2546071009	CE04W1E103=	10000μF 25V
C3, 24	2544140000	CE04W1V4R7=	4.7μF 35V
C17, 18	2544141009	CE04W1V100=	10μF 35V
C19	2544159004	CE04W1V101=	100μF 35V
OTHER PARTS GROUP			
CN3, 10	2035622066	5P MINI CONNE PIN	
CN2,6, 9	2035622024	4P MINI CONNE PIN	
CN5	2035622095	9P CONNE BASE	
CN1	2035622037	8P MINI CONNE PIN	
CN11	2035622082	6P CONNE BASE	
CN4	2037642015	4P EI WITH WIRE	
CN7	2045405008	9P EI CON WITH WIRE	
CN12, 13	2032075001	2P CONNECTOR BASE	
CN8	2050170001	12P BOARD BASE	
	4178062109	HEAT SINK	TR17
	4178079008	RADIATOR	TR18, 23, IC7
	2048110002	8P DIN JACK	
CRM1	3998031007	CERAMIC RESONATOR	800KHZ
CN905	2039639013	5P EI. CONNE	
CN906	2039621021	5P EI CON WITH WIRE	

• The carbon resistors rated at ¼W are not listed herein.

KU-0449B TIMER SWITCH UNIT

Ref. No.	Part No.	Part Name	Remarks
	2129188005	SLIDE SWITCH	
CN14	2039632023	5P CONNE CORD	

KU-0449C POWER SUPPLY UNIT

	Ref. No.	Part No.	Part Name	Remarks
⚠	SK1	2618006009	SPARK KILLER	EU, EC
⚠		2538010007	CK45=2GAC103P	E2, E1, EA, EG, EK
⚠	LF1	2398019002	LINE FILTER COIL	EU
⚠		2061031045	FUSE 210mA	E1
⚠		2061031032	FUSE 160mA	E2, EA, EF, EG, EK
		5138254024	FUSE LABEL	E1
		5138254011	FUSE LABEL	E2, EA, EF, EG, EK
⚠	S1	2129136028	POWER SWITCH	
		EE-1656	BASE TERMINAL	

KU-0450 AUDIO AMP UNIT

Ref. No.	Part No.	Part Name	Remarks
SEMICONDUCTOR GROUP			
IC304,305	2620277004	M74LS05P	
IC301	2630226003	M5220L	
IC102,202	2630222007	NE652	
106,206			
IC101,201	2630229000	LA6458DS	
103,203,			
104,204,			
105,205,			
303			
IC302	2630125007	MPC4557	
IC351	2630227002	BA338	
TR303	2710102034	2SA1015Y/GR	
TR101~106	2730245023	2SC2603E/F	
108~113			
201~206			
208~213			
301, 302			
305~308			
351~352			
TR107,207	2730198028	2SC1815 (GR)	
TR304	2730195005	2SC2060 (Q)	
TH-101,201	2760118007	D-33A	
ZD301	2760218046	HZ9B1	
D301~306	2760049008	1S2076	
RESISTOR GROUP			
			Variable resistor
Vr101,201	2116000031	V08PB102	1KΩB
Vr102,202	2116000044	V08PB503	〃 50KΩB
Vr103, 203	2116000086	V08PB204	〃 200KΩB
VR301	2118071107	J3020V20DA103	〃 10KΩA
VR302	2118072106	J10001H10CA503	〃 50KΩA
CAPACITOR GROUP			
			Ceramic
C102,202	2533627000	CC45SL1H101J	100PF 50V
C112,212	2533633007	CC45SL1H181J	180PF 50V
C319,320	2539012004	CK45=1E333M	0.033μF 25V
C351,352	2539013003	CK45=1E473M	0.047μF 25V
C115,215	2539014002	CK45=1E683M	0.068μF 25V
139,239			
C322	2531022005	CK45F1H222Z	0.0022μF 50V
C101,201	2531055056	CK45B1H221K	220PF 50V
160,260			
C132,232	2531004007	CK45B1H102K	0.001μF 50V
321			
C159,259	2531056026	CK45B1H122K	0.0012μF 50V
C155,255	2531005006	CK45B1H152K	0.0015μF 50V
C157,257	2531006005	CK45B1H222K	0.0022μF 50V
150,250			
C156,256	2531061008	CK45B1H272K	0.0027μF 50V
C154,254	2531007004	CK45B1H332K	0.0033μF 50V
C316	2531062007	CK45B1H392K	0.0039μF 50V
			Electrolitic
C311	2544161047	CE04W0J471M	470μF 6.3V

Ref. No.	Part No.	Part Name	Remarks
C103,203	2544129005	CE04W1A470=	47μF 10V
301,302			
304,310			
C307,308	2544131006	CE04W1A221=	220μF 10V
C355	2544145005	CE04W1HR47=	0.47μF 50V
C105,107	2544132005	CE04W1C100=	10μF 16V
108,111			
113,119			
125,126			
134,137			
145,146			
151,161			
205,207			
208,211			
213,219			
225,226			
234,237			
245,246			
251,261			
303,305			
306,312			
357			
C131,133,	2544140000	CE04W1V4R7=	4.7μF 35V
231,233,			
313,314,			
356			
C117,124	2549014005	CE04W1HR10=	0.1μF 50V
142,149			
217,224			
242,249			
C118,143	2549014034	CE04W1HR15=	0.15μF 50V
218,243			
C309,358	2544147003	CE04W1H2R2=	2.2μF 50V
C353,354	2544089006	CE04W1H010M	
			Film
C158,258	2551063002	CQ93M1H182K	0.0018μF 50V
C109,120	2551120084	CQ93M1H472J	0.0047μF 50V
135,144			
153,209			
220,235			
244,253			
C104,204	2551120097	CQ93M1H562J	0.0056μF 50V
C106,121	2551121025	CQ93M1H103J	0.01μF 50V
138,206			
221,238			
C315	2551074004	CQ93M1H153K	0.015μF 50V
C110,136	2551121083	CQ93M1H333J	0.033μF 50V
210,236			
C116,123	2551078000	CQ93M1H333K	0.033μF 50V
141,148			
216,223			
241,248			
318			
C114,140	2551122008	CQ93M1H473J	0.047μF 50V
214,240			

Ref. No.	Part No.	Part Name	Remarks
C152,252	2551080001	CQ93M1H473K	0.047μF 50V
C317	2554078081	CQ93P2A562J	0.056μF 100V
C122,147	2561030025	CF93B2A224J	0.22μF 100V
222,247			
OTHER PARTS GROUP			
S301	2129189004	PUSH SWITCH	
RL301	2140020003	REED RELAY (L23M)	
L102,104	2358011008	INDUCTOR	
202,204			
L105,205	2358005001	INDUCTOR	
L301	2358005014	INDUCTOR	
L101,201	2310825008	BIAS FILTER	
L103,203	2328043006	MPX FILTER	
L106,206	2328044005	BAND TRAP FILTER	
T301	2398018003	OSC COIL	
J303	2048108014	MIC JACK	
J301	2048109013	HEAD PHONE JACK	
J302	2048114008	4P PIN JACK	
CN101,201	2032075001	2P CONNECTOR BASE	
CN302	2035622008	3P MINI CONNE PIN	
CN301,303	2035622024	4P MINI CONNE PIN	
CN307	2050170001	12P BOARD BASE	
CN306	2031638012	2P EI CONNE WIRE	
CN305	2047788008	12P EI CONNE ASS	
CN304	2045404009	9P EI CONNE WIRE	

• The carbon resistors rated at ¼W are not listed herein.

KU-0451 CTS UNIT

Ref. No.	Part No.	Part Name	Remarks
SEMICONDUCTOR GROUP			
IC701	2620346003	HD44750A42	
IC703	2630161003	UPC358C	
IC501,601	2630229000	LA6458DS	
702,704			
TR501~511	2730245023	2SC2603E/F	
601~611			
702~712			
D50,504	2760001004	1N34A	
603,604			
D501,502	2760049008	1S2076	
601,602,			
701			
RESISTOR GROUP			
Vr501,601	2116004024	V08QB202	Variable resistor 2KΩB
CAPACITOR GROUP			
			Ceramic
C504,604	2531002009	CK45B1H471K	470PF 50V
CB701,702	2531151002	CK99B1H102MP4	0.001μF 50V
			Electrolitic
C704	2544130007	CE04W1A101=	100μF 10V
C507,508	2544132005	CE04W1C100=	10μF 16V
512,607			
608,612			
C701,703	2544134003	CE04W1C330=	33μF 16V
C506,509	2544140000	CE04W1V4R7=	4.7μF 35V
513,606			
609,613			
			Film
C503,603	2551060005	CQ93M1H102K	0.001μF 50V
C505,605	2551061004	CQ93M1H122K	0.0012μF 50V
C610,611	2551062003	CQ93M1H152K	0.0015μF 50V
C502,602	2551063002	CQ93M1H182K	0.0018μF 50V
C501,601	2551066009	CQ93M1H332K	0.0033μF 50V
C510,511	2551074004	CQ93M1H153K	0.015μF 50V
C702	2551079009	CQ93M1H393K	0.039μF 50V
OTHER PARTS GROUP			
S701	2129190103	SLIDE SWITCH	
L501,601	2310825009	BIAS FILTER	
CN701	2035622037	8P MINI CONNE PIN	
CN702,703	2050171000	12 PIN BOARD CONTACT	

• The carbon resistors rated at ¼W are not listed herein.

KU-0452 FL METER UNIT

Ref. No.	Part No.	Part Name	Remarks
SEMICONDUCTOR GROUP			
IC801	9ZLBL141	LBL-141	
TR801~804	9Z2SA733	2SA733	
TR805	2730130002	2SC945P	
D802	2760038006	1S1588	
D801	9ZRD5.1EB	RD5.1EB	
RESISTOR GROUP			
Vr801,802	2116000044	V08PB503	Variable resistor 50KΩB
CAPACITOR GROUP			
			Ceramic
C801,802 805	2539015001	CK45B=1E104M	0.1μF 25V
			Electrolitic
C807	2544138009	CE04W1E470M	47μF 10V
C803,804	2544140000	CE04W1V4R7M	4.7μF 35V
C806	2549014021	CE04W1HR33M	0.33μF 50V
C809	2544145005	CE04W1HR47M	0.47μF 50V
C808	2544089006	CE04W1H010M	1μF 50V
OTHER PARTS GROUP			
FL801	3939176002	FL METER	
	4418997002	METER HOLDER	
CN801	2035622024	4P MINI CONNE PIN	
CN802	2035622053	12P MINI CONNE PIN	

• The carbon resistors rated at ¼W are not listed herein.

KU-0456 QUARTZ LOCK UNIT

Ref No.	Part No.	Part Name	Remarks
SEMICONDUCTOR GROUP			
IC901	2630202000	MSL9348RS	
TR961, 964	2710102034	2SA1015Y/GR	
TR962, 963	2730245007	2SC2603E/FT	
ZD951	2760173000	HZ-6A	
D951	2760001004	IN34A	
LE951	3939178000	LN25RCP	
CAPACITOR GROUP			
			Ceramic
C951, 952	2533631009	CC45SL1H151J	150PF 50V
C955	25331006005	CK45B1H222K	0.0022μF 50V
			Electrolitic
C953	2544129005	CE04W1A470=	47μF 16V
C954	2544146004	CE04W1H010=	1μF 50V
OTHER PARTS GROUP			
XT951	3998025000	CRYSTAL	4.5 MHZ
CN904	2039617006	4PEI CONNE WIRE	
CN905, 906	2035622066	5P MINI CONN. PIN	

* The carbon resistors rated at ¼W are not listed herein.

KU-0453-1 FL COUNTER UNIT

Ref. No.	Part No.	Part Name	Remarks
SEMICONDUCTOR GROUP			
IC401	9ZHD38750A	HD38750A38	
IC402	9ZHD14069U	HD14069UBP	
IC403	9ZHD7406	HD7406	
TR401,402 403~405	2730198002	2SC1815Y	
D401~403	9Z1SS53	1SS53	
CAPACITOR GROUP			
			Ceramic
C402	2533629008	CC45SL1H121J	120PF 50V
C403	2536430003	CC45SL1H471J	470PF 50V
			Electrolitic
C404	2544134003	CE04W1C330=	33μF 16V
C401	2544164002	CE04W1E4R7=	4.7μF 25V
OTHER PARTS GROUP			
CN402	2032075001	2P CONNECTOR BASE	
CN403	2035622082	6P MINI CONNE PIN	
CN401	2035622095	9P MINI CONNE PIN	
CN404	2035622079	7P MINI CONNE PIN	
CN405	2032075001	2P CONNECTOR BASE	
FL401	9ZFG46C5	FL COUNTER	
	4418993006	COUNTER HOLDER	
XT401	9ZCSB400P	CERAMIC RESONATOR	

• The carbon resistors rated at ¼W are not listed herein.

KU-0454-2 CONTROL UNIT

Ref. No.	Part No.	Part Name	Remarks
SEMICONDUCTOR GROUP			
LD451	3939180001	LED (RED)	
LD452,456	3939181000	LED (AMBER)	KU-0454
LD453~455	3939182009	LED (GREEN)	KU-0454
RESISTOR GROUP			
R451	2412072006	RD14B2E151J	KU-0454
R452	2412076002	RD14B2E221J	KU-0454
OTHER PARTS GROUP			
S451	2129213103	PUSH SWITCH	3 KEY
S452	2129192004	PUSH SWITCH	5 KEY
S453~461	2124388004	TACT SWITCH	KU-0454
OTHER PARTS GROUP			
CN452	2041631009	6P EI CON ASS	
CN453	2045400003	8P EI CON ASS	KU-0454
CN451	2045401002	8/4P EI CONNE ASS	
	4438693205	LED GUIDE (A)	
	4438694204	LED GUIDE (B)	KU-0454
CN455	2045406007	7P EI CON ASS'Y	

EXPLODED VIEW OF MECHANISM UNIT

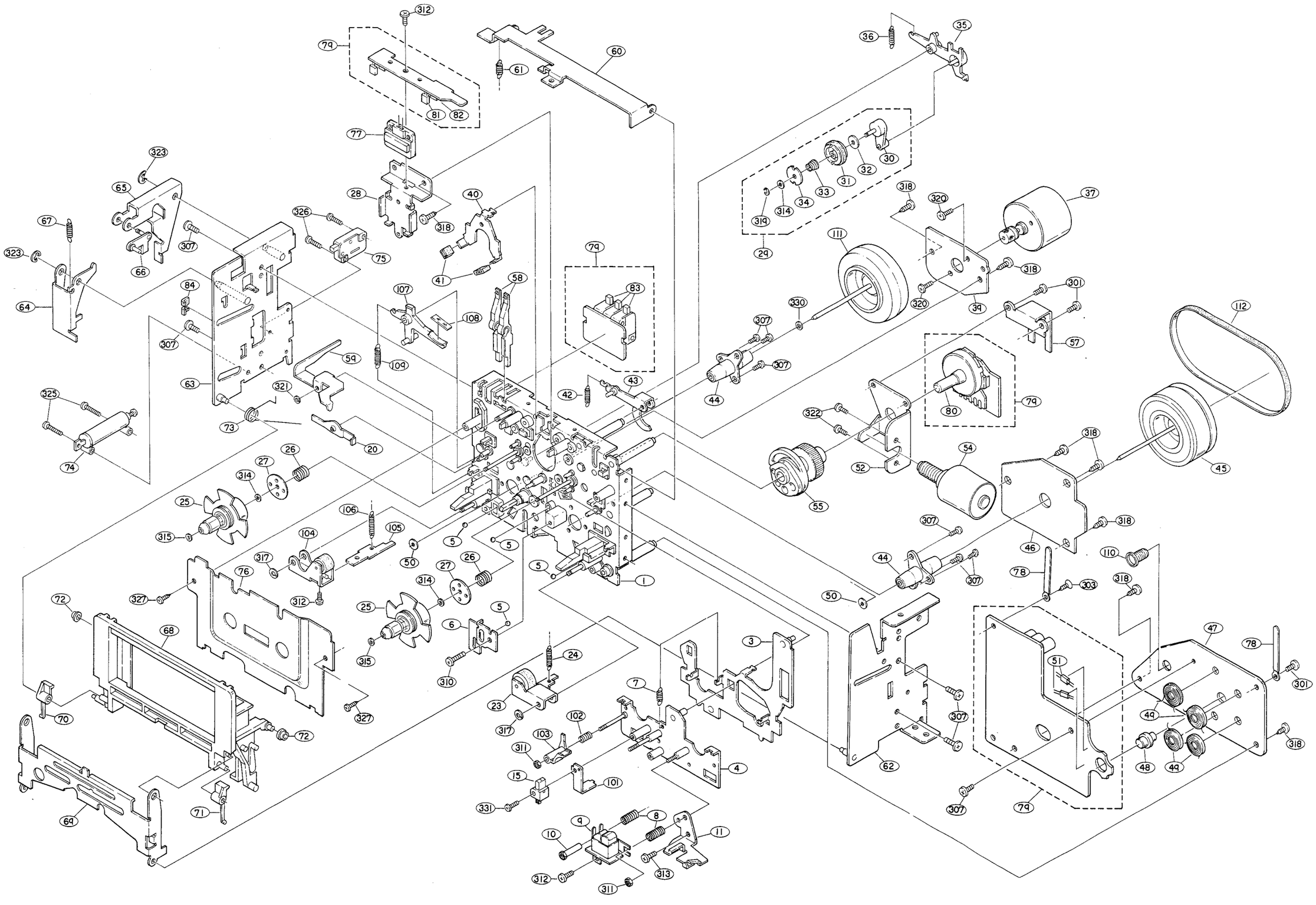

EXPLODED VIEW OF CABINET AND CHASSIS GROUP

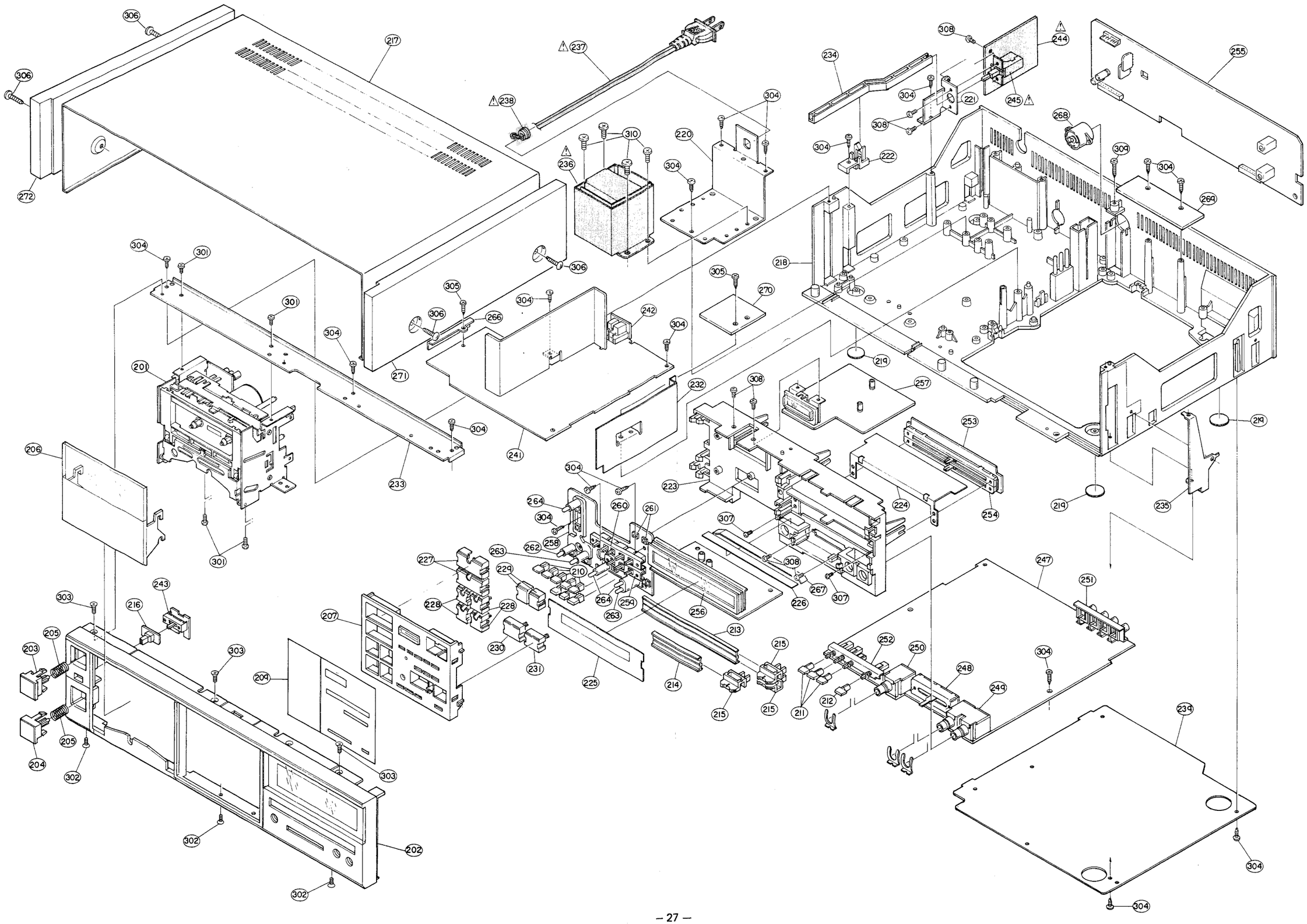

DR – M4

P. W. BOARD OF KU–0450 AUDIO AMP UNIT

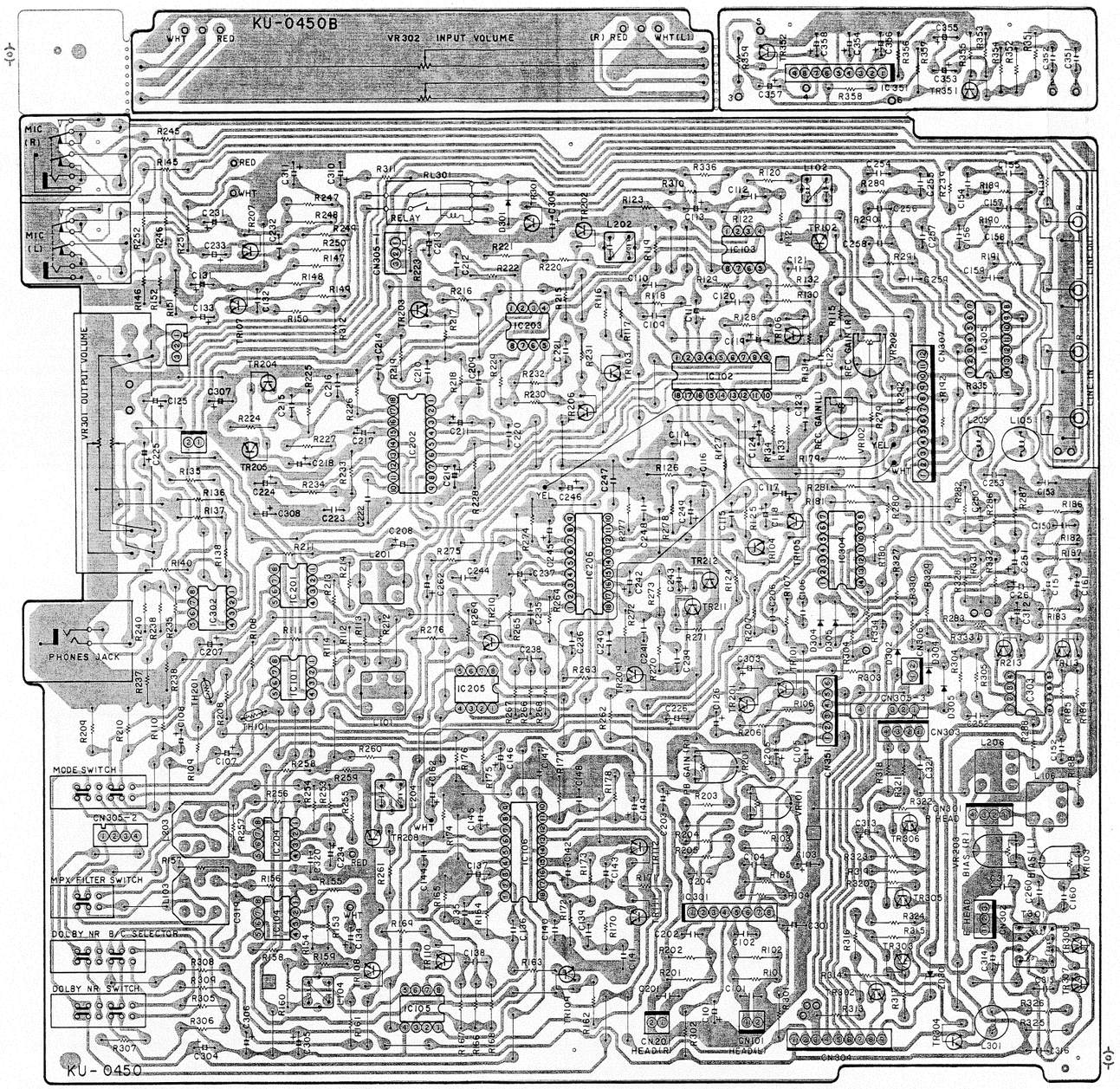

P. W. BOARD OF KU-0451 CTS UNIT

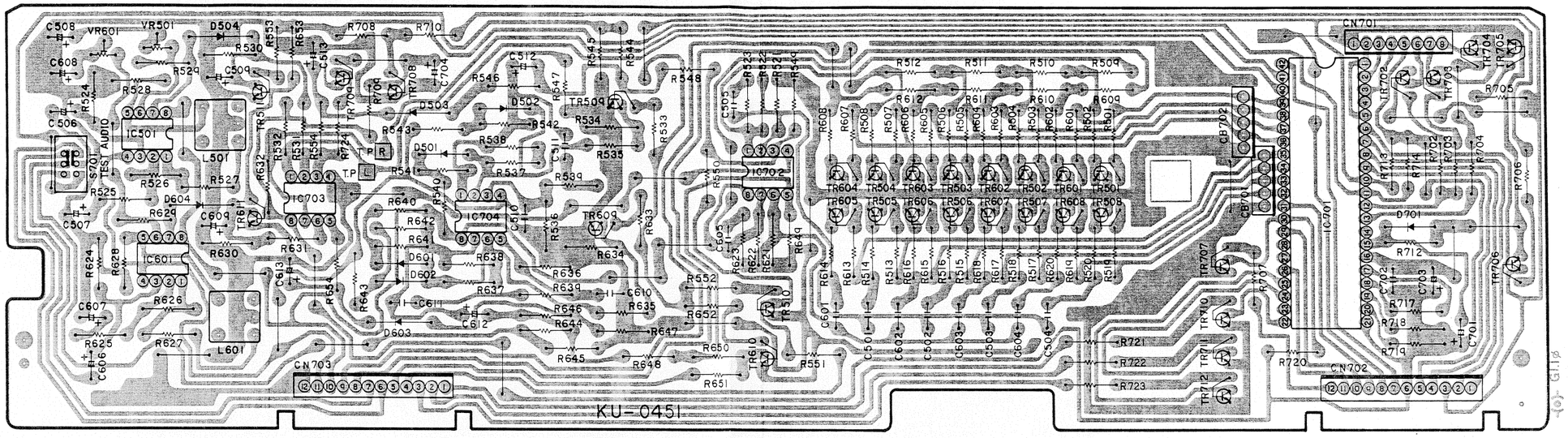

P. W. BOARD OF KU-0452 FL METER UNIT

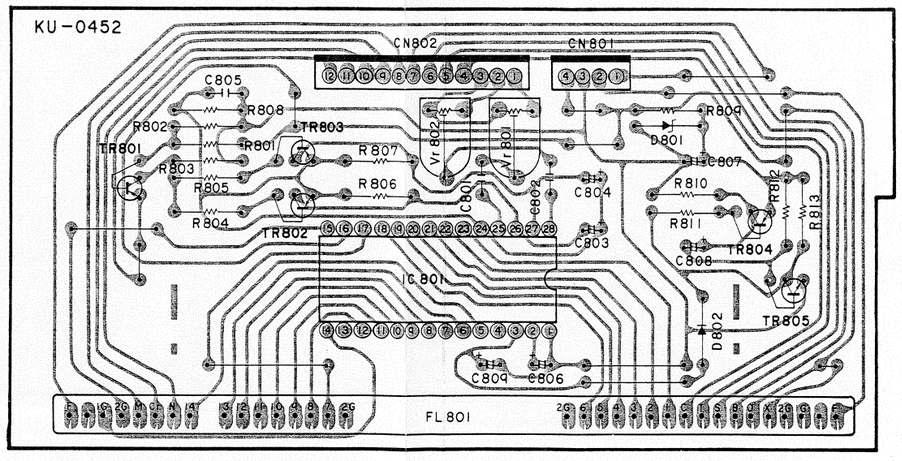

P. W. BOARD OF KU-0449 LOGIC AND POWER UNIT

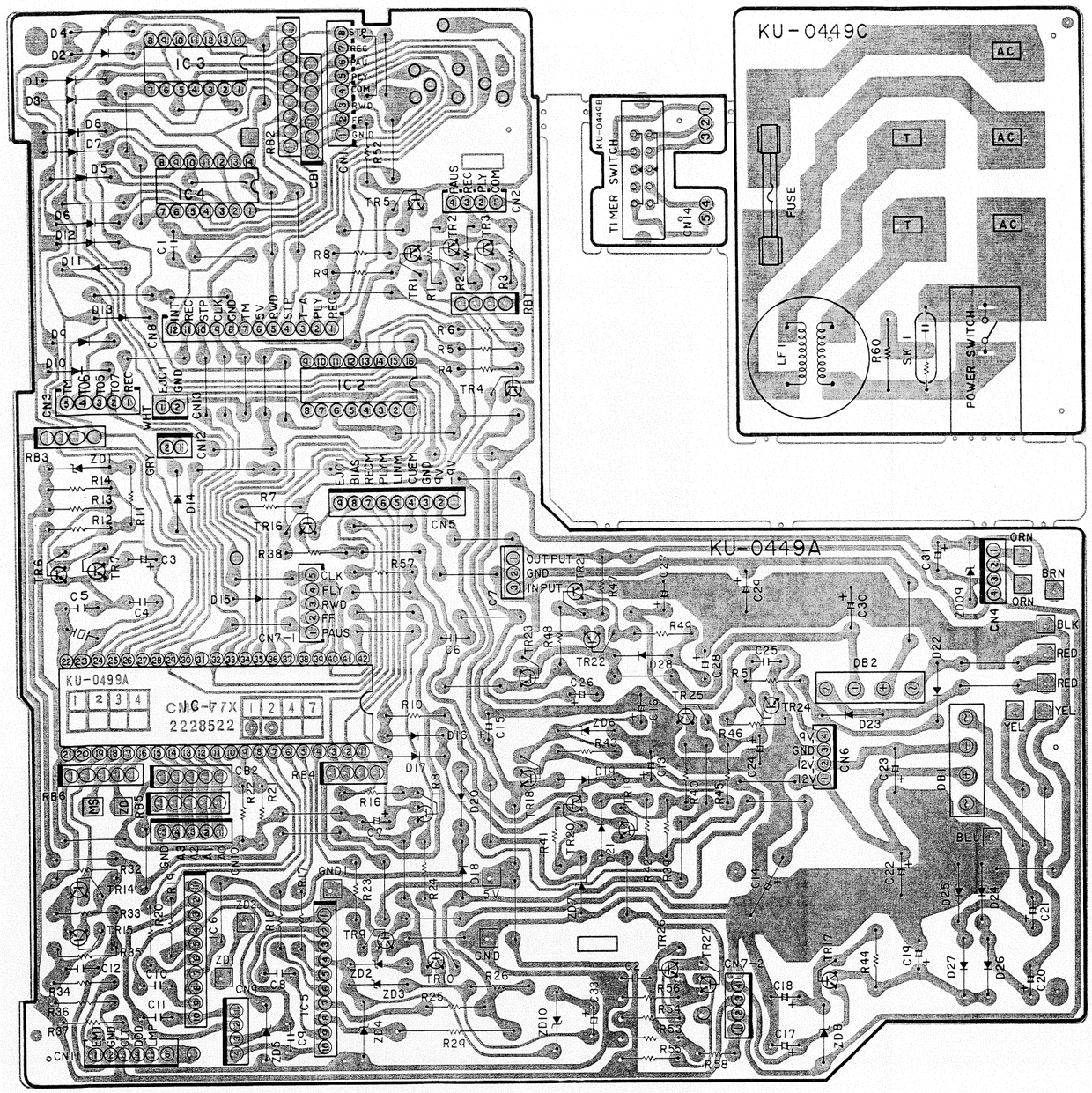

P. W. BOARD OF KU-0453-1 FL COUNTER UNIT

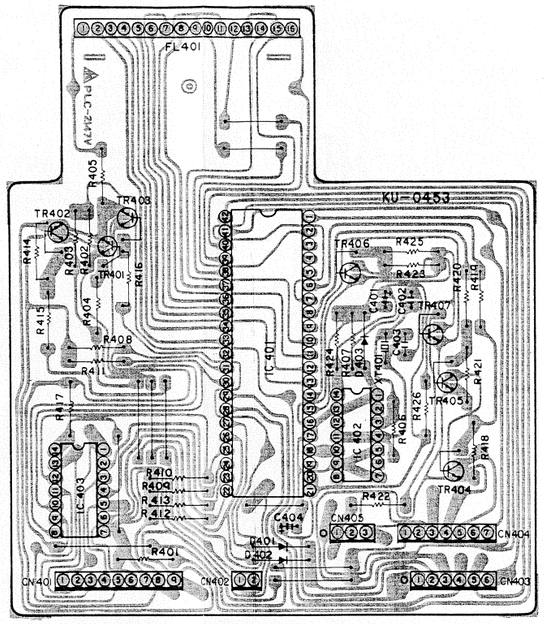

P. W. BOARD OF KU-0454-2 CONTROL UNIT

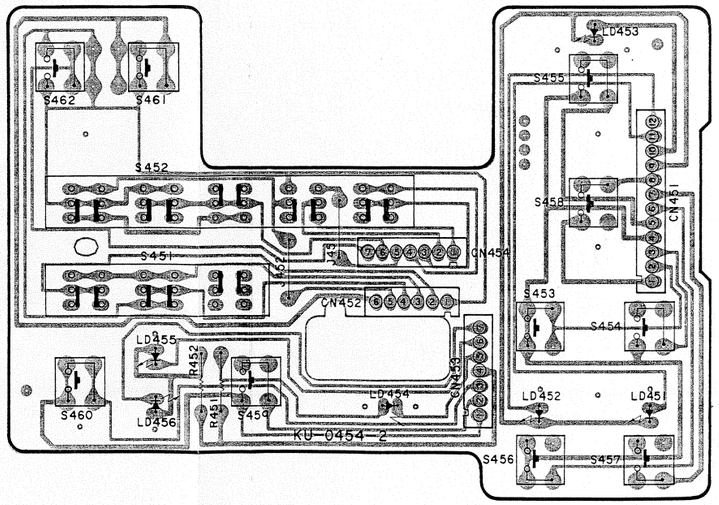

P. W. BOARD OF KU-0455 CAPSTAN SERVO UNIT

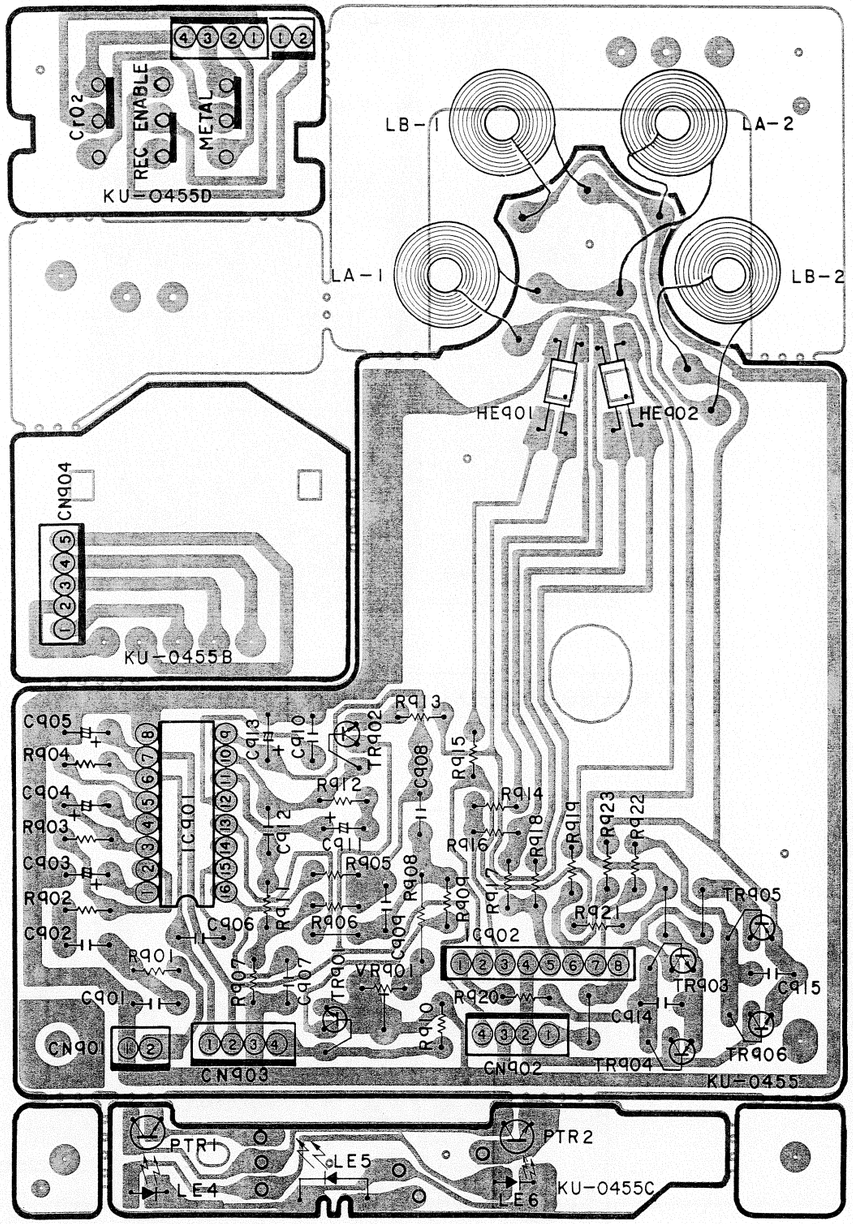

P. W. BOARD OF KU-0456 QUARTZ LOCKED UNIT

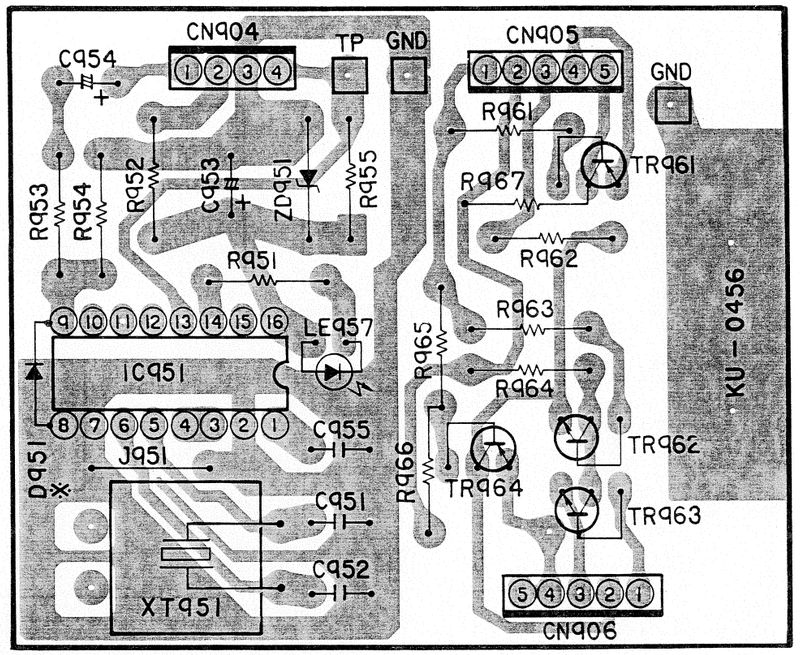

(REVISED)

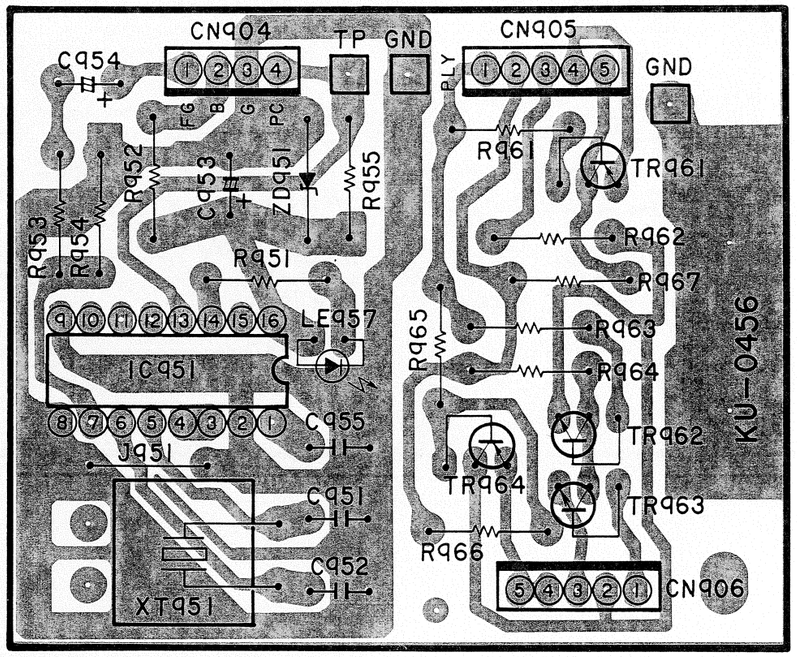

CONNECTIONS OF P. W. BOARD

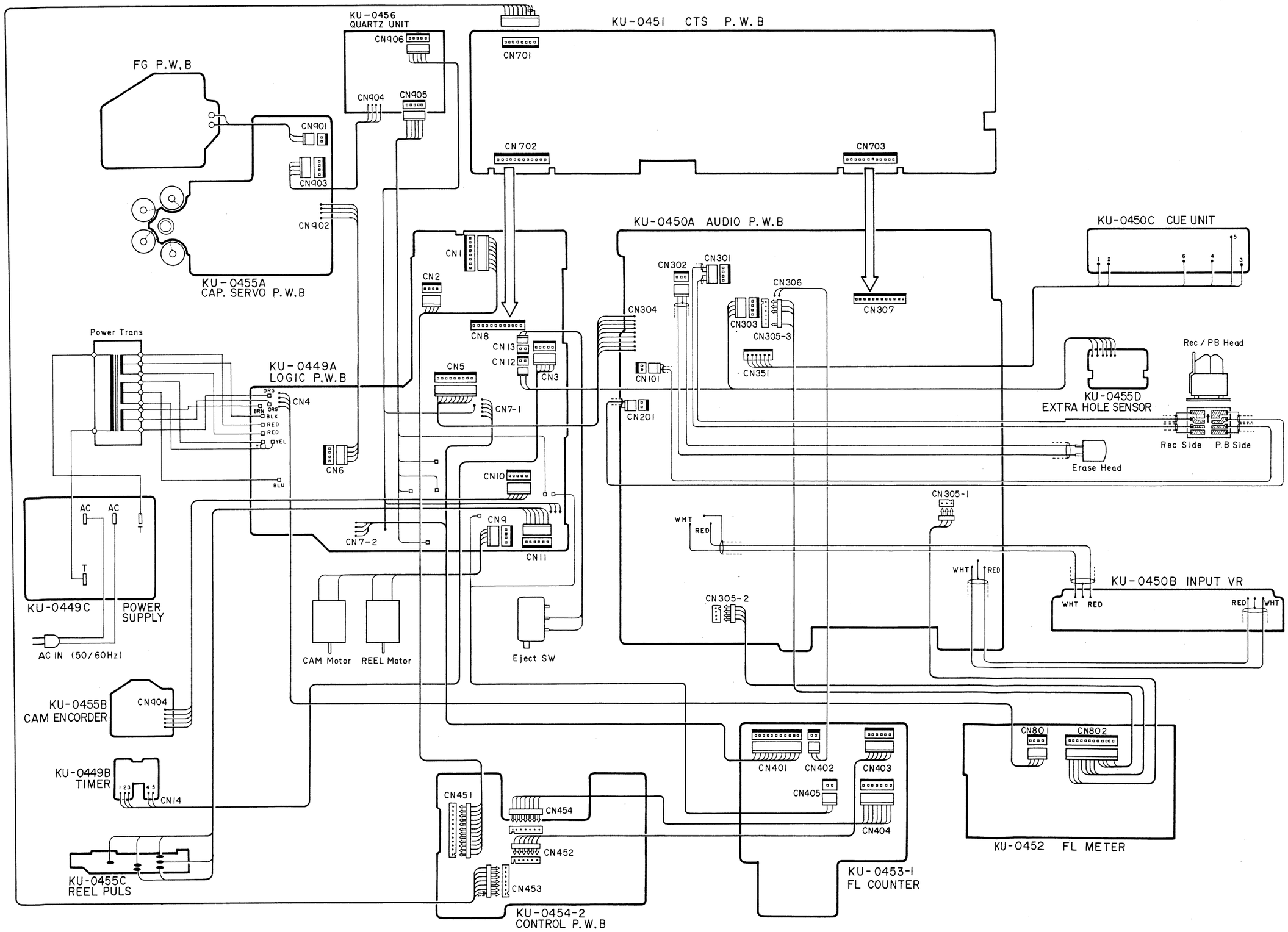

SCHEMATIC DIAGRAM OF AUDIO AMP UNIT

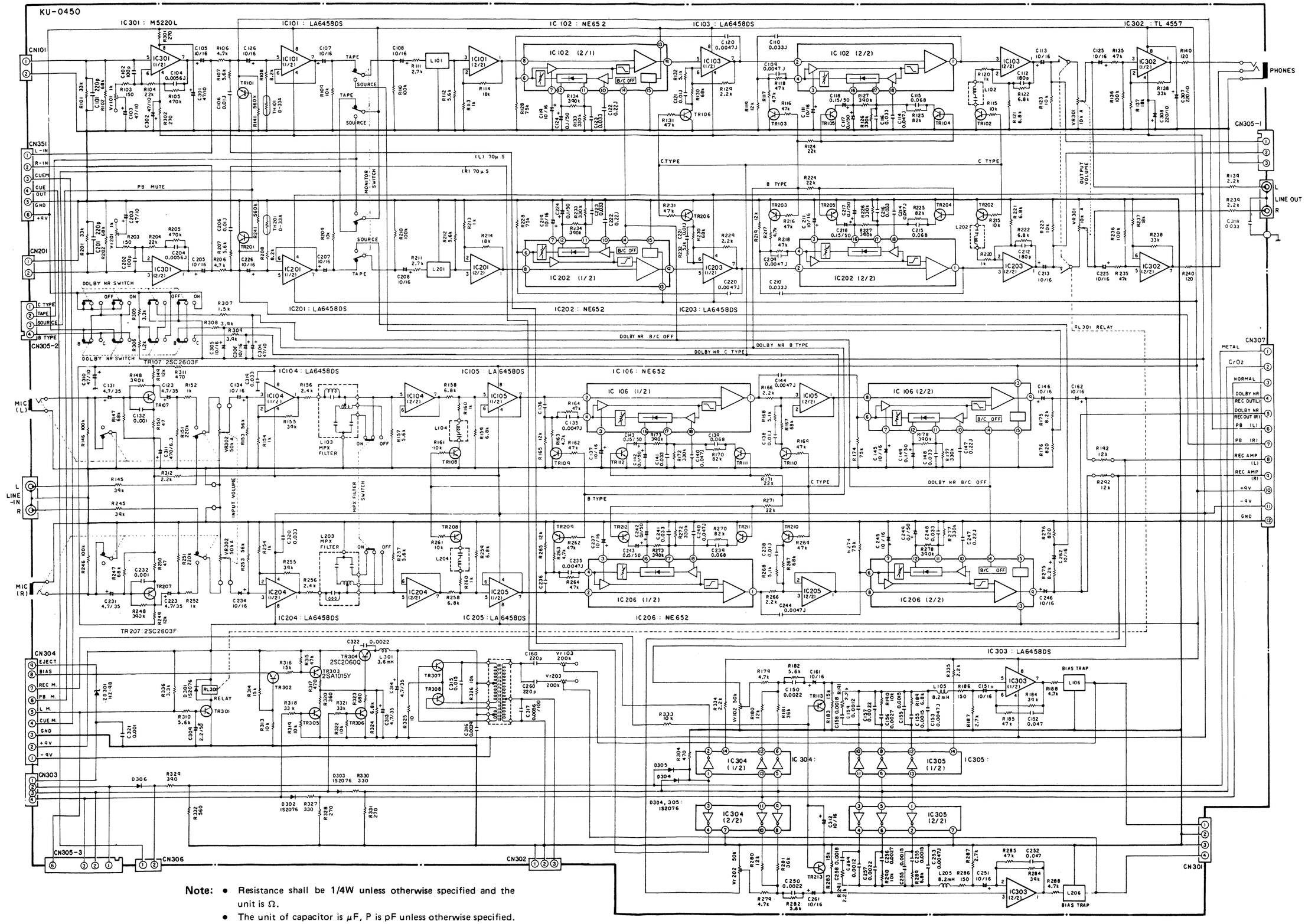

Note:

- Resistance shall be 1/4W unless otherwise specified and the unit is Ω.
- The unit of capacitor is μF, P is pF unless otherwise specified.
- This circuit diagram shows the basic circuit. It is subject to change for the purpose of improvement.

SCHEMATIC DIAGRAM OF CTS UNIT

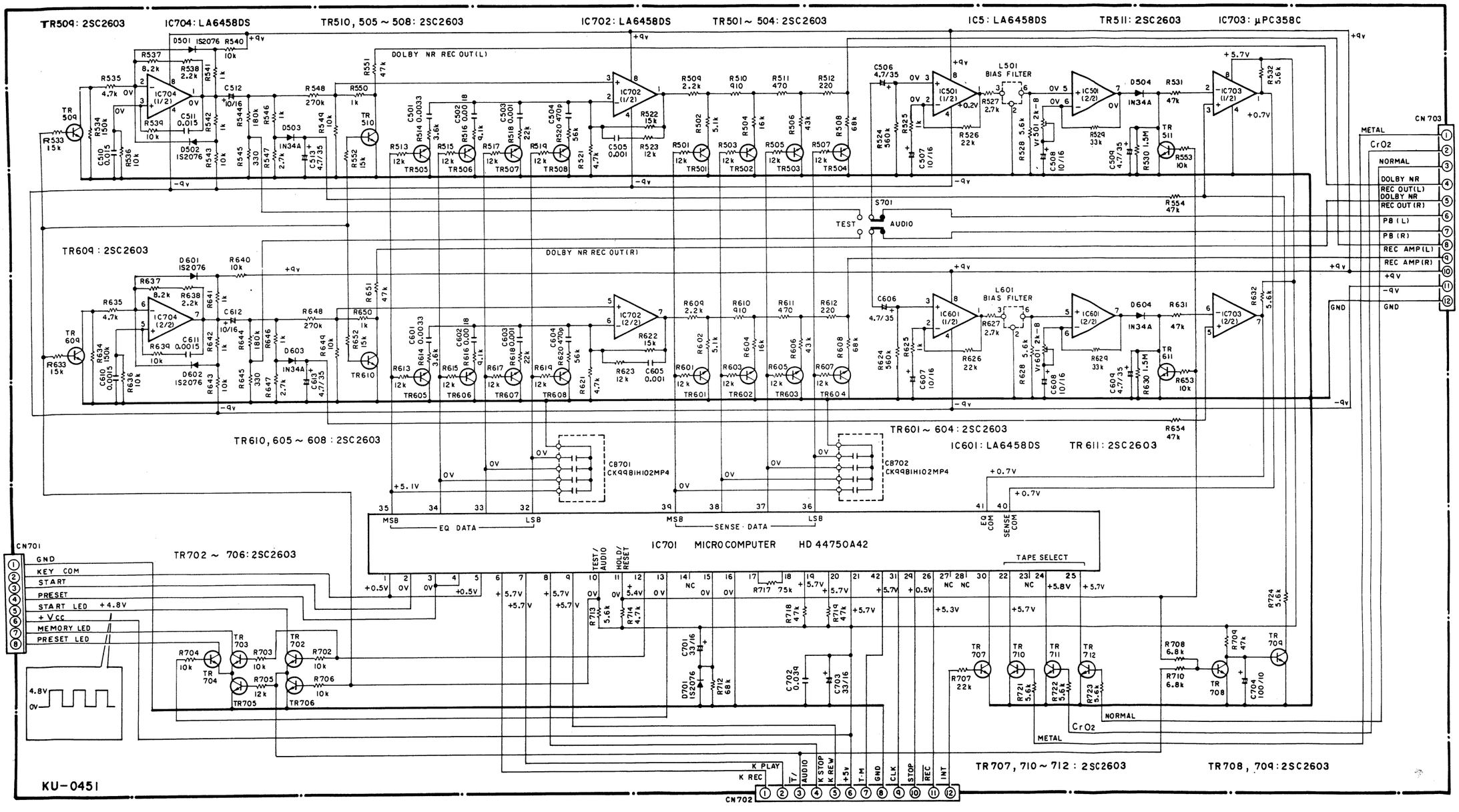

Note:

- Resistance shall be 1/4W unless otherwise specified and the unit is Ω.
- The unit of capacitor is μF, P is pF unless otherwise specified.
- This circuit diagram shows the basic circuit. It is subject to change for the purpose of improvement.

SCHEMATIC DIAGRAM OF LOGIC AND POWER UNIT

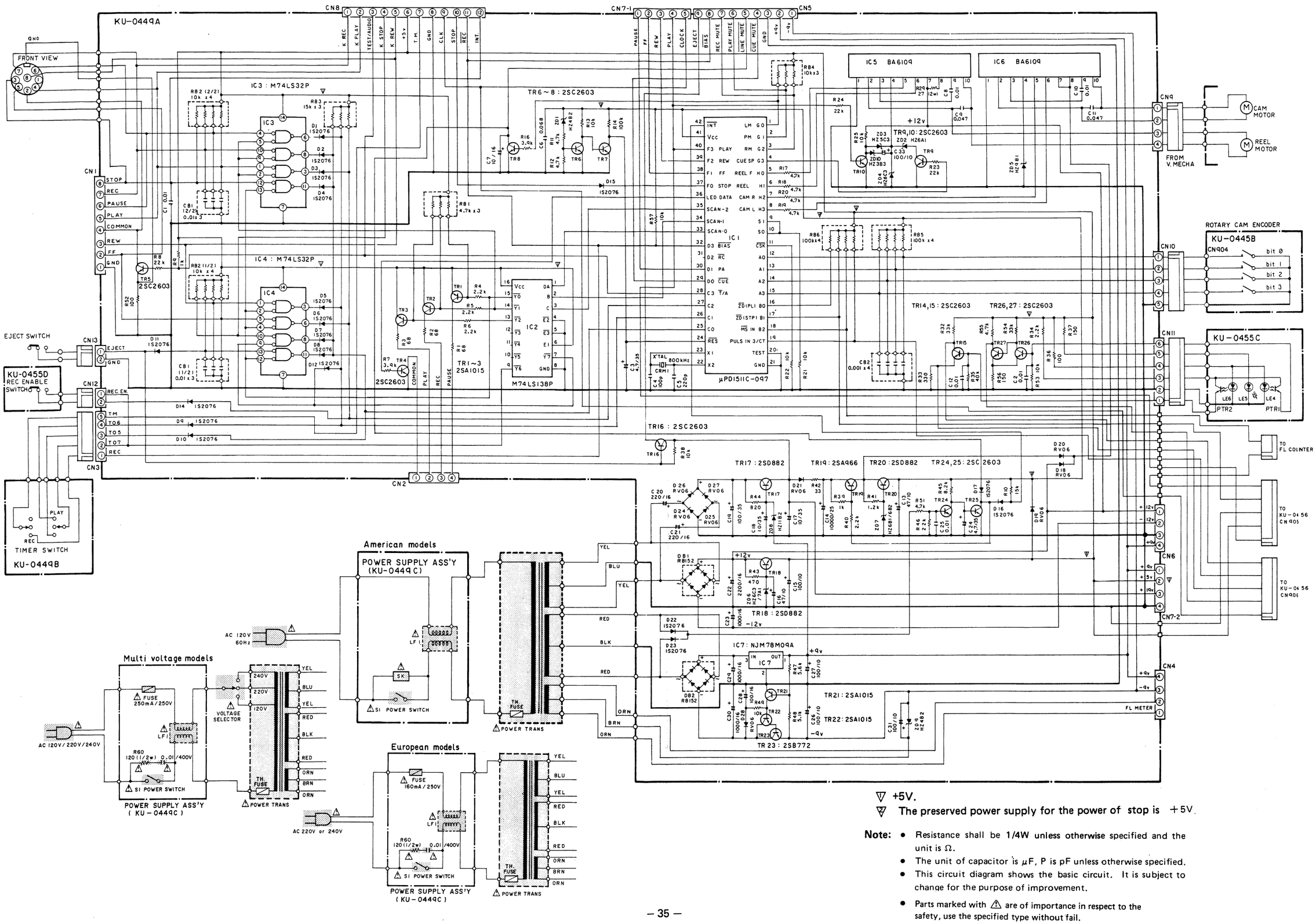

▽ +5V.

▽ The preserved power supply for the power of stop is +5V.

Note:

- Resistance shall be 1/4W unless otherwise specified and the unit is Ω.
- The unit of capacitor is μF, P is pF unless otherwise specified.
- This circuit diagram shows the basic circuit. It is subject to change for the purpose of improvement.
- Parts marked with ⚠ are of importance in respect to the safety, use the specified type without fail.

Mechanism-Control Microcomputer Terminal Function Table (IC_1 : μPD1511C-097)

Terminal number	Name	Input/output	Function	Terminal voltage (V) STOP	PLAY	REC
1	$\overline{LM}$	Output	LINE MUTE terminal (Active LOW)	0	–	–
2	PM	Output	PLAY MUTE terminal (Active HIGH)	3.7	0	–
3	RM	Output	REC MUTE terminal (Active HIGH)	3.7	–	0
4	CUE SP (NC)	Output	NON CONNECTION	0	0	0
5	REEL F	Output	REEL MOTOR FORWARD terminal	0	3.6	–
6	REEL R	Output	REEL MOTOR REVERSE terminal	0	–	–
7	$\overline{CAR\ R}$	Output	CAM MOTOR RIGHT terminal	3.6	–	–
8	$\overline{CAM\ L}$	Output	CAM MOTOR LEFT terminal	3.6	–	–
9	NC		NON CONNECTION	0	–	–
10	NC		NON CONNECTION	0	–	–
11	NC		NON CONNECTION	0	–	–
12	A_0	Input	CAM ENCODER DATA terminal	0	0.5	–
13	A_1	Input		4.9	–	–
14	A_2	Input		4.9	0	–
15	A_3	Input		0	4.9	–
16	$\overline{ZE}$ (PL) (NC)	Input	NON CONNECTION	5.7	–	–
17	$\overline{ZD}$ (STP) (NC)	Input	NON CONNECTION	5.7	–	–
18	$\overline{MS}$ IN (NC)	Input	NON CONNECTION	5.7	–	–
19	PULS IN	Input	REEL PULSE terminal	0.6	–	–
20	TEST	Input	Microcomputer TEST terminal	0	–	–
21	GND	Input	GND	0	–	–
22	X_2	Input	OSC terminal for the microcomputer	1.9	–	–
23	X_1	Input		2.0	–	–
24	$\overline{RES}$	Input	RESET terminal	4.9	–	–
25	C_0	Input	KEY MATRIX input terminal	5.7	–	–
26	C_1	Input		5.1	–	–
27	C_2	Input		5.0	–	–
28	$\overline{T}$ / A	Input	TEST/AUDIO terminal	4.6	–	–
29	$\overline{CUE}$ (NC)	Output		0	0.1	0.1
30	PA	Output	PAUSE STATUS terminal	0.1	–	–
31	$\overline{RC}$	Output	REC STATUS terminal	0	–	–
32	$\overline{BIAS}$	Output	BIAS control terminal	5.2	–	0.1
33	LED DATA	Output	LED control terminal	2.0	–	–
34	E_1	Output	Output terminal for KEY MATRIX	2.0	–	–
35	E_2	Output		2.0	–	–
36	E_3	Output		0	0.5	0.9
37	STP	Output	STOP STATUS terminal	5.4	0	0
38	FF	Output	FF STATUS terminal	0.1	–	–
39	FW	Output	REW STATUS terminal	0.1	–	–
40	PL	Output	PLAY STATUS terminal	0.1	3.8	3.8
41	Vcc	Input	Power input terminal +5V	4.9	–	–
42	$\overline{INT}$	Input	Interrupt terminal	4.9	–	–

SCHEMATIC DIAGRAM OF FL COUNTER UNIT

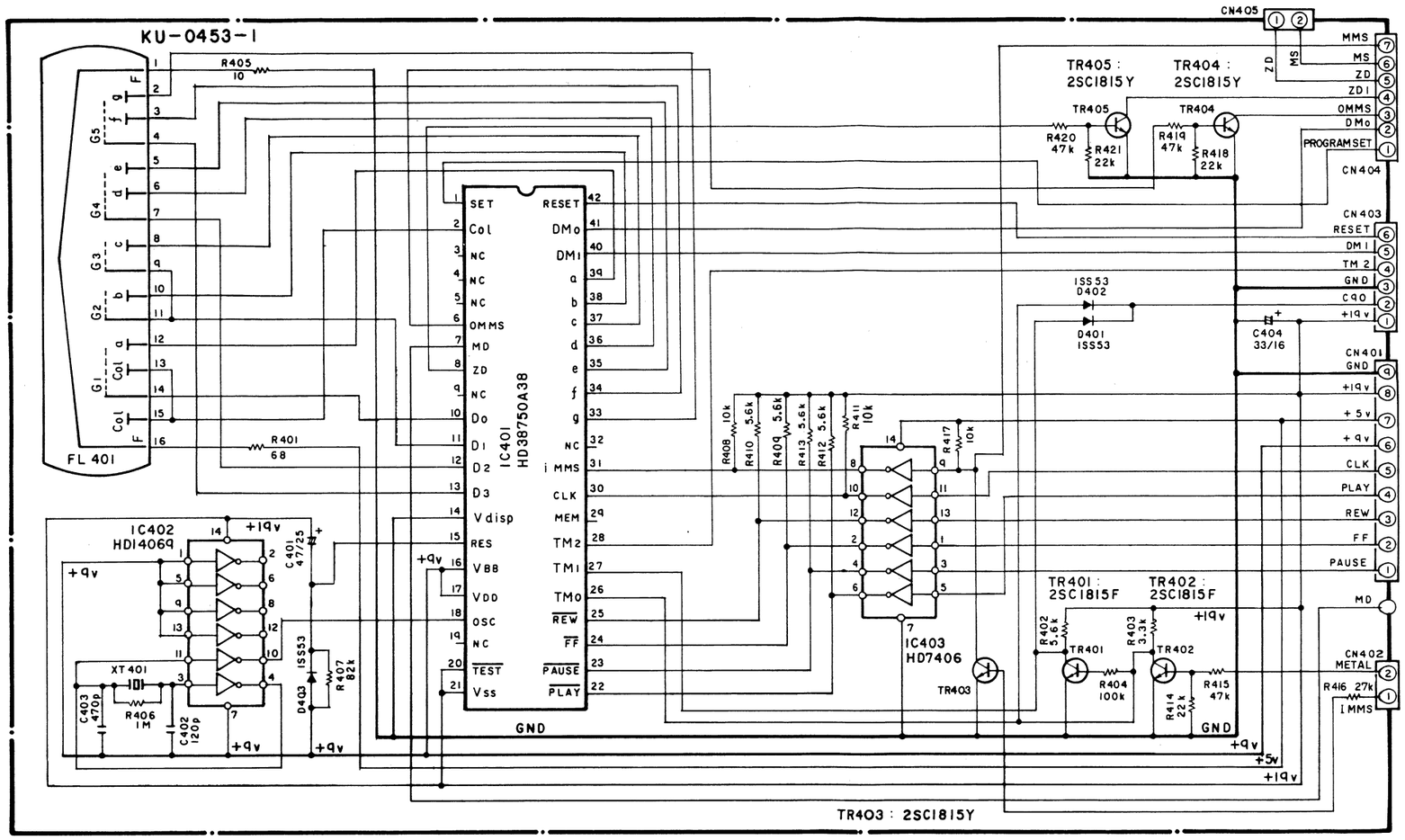

Note:
- Resistance shall be 1/4W unless otherwise specified and the unit is Ω.
- The unit of capacitor is μF, P is pF unless otherwise specified.
- This circuit diagram shows the basic circuit. It is subject to change for the purpose of improvement.

FL COUNTER CPU Terminal Function Table (IC401: HD38750A38)

Terminal number	Name	Input/output	Function	Terminal voltage (V) STOP	COUNTER	Remain
1	SET (NC)		NON CONNECTION	0.05	0.04	0.05
2	COL	Output	Colon indication output terminal	0.05	0.04	18.6
3	NC		NON CONNECTION	0.05	0.04	0.05
4	NC		"	0.04	0.04	0.05
5	NC		"	0.04	0.04	0.05
6	OMMS (NC)		"	0.04	0.03	0.05
7	MD (NC)		"	0.04	0.04	0.04
8	ZD (NC)		"	0.04	0.04	0.04
9	TEO (NC)		"	0.04	0.03	0.04
10	D_0	Output	Display tube grid terminal	0.9	0.9	0.9
11	D_1	Output		0.9	0.9	0.9
12	D_2	Output		0.9	0.9	0.9
13	D_3	Output		0.9	0.9	0.9
14	Vdisp	Input	Power input terminal for the display tube: OV (GND)	0	0	0
15	RST	Input	RESET terminal for the microcomputer	8.6	8.6	8.6
16	VBB	Input	Power input terminal: 10V	8.7	8.7	8.7
17	VDD	Input		8.7	8.7	8.7
18	OSC	Input	OSC pulse terminal for the microcomputer	13.6	13.6	13.6
19	NC		NON CONNECTION	–	–	–
20	TEST	Input	Microcomputer TEST	18.8	18.8	18.8
21	VSS	Input	Power earth input terminal: 19V	18.8	18.8	18.8
22	$\overline{PLAY}$	Input	Record/Play signal terminal	17.7	0.09	0.09
23	$\overline{PAS}$	Input	Pause signal terminal	17.7	17.7	17.7
24	$\overline{FF}$	Input	Fast forward signal terminal	17.7	17.7	17.7

Terminal number	Name	Input/output	Function	Terminal voltage (V) STOP	COUNTER	Remain
25	$\overline{REW}$	Input	Rewind signal terminal	17.7	17.7	17.7
26	TM_0	Input	Tape (length) mode terminal (C-60 H, MC-60 L, C-90 L, C-120 L, LC-46 L, LMC-46 H)	0.09	0.09	0.09
27	TM_1	Input	(C-60 L, MC-60 H, C-90 L, C-120 L, LC-46 L, LMC-46 H)	17.8	17.8	17.8
28	TM_2	Input	(C-60 L, MC-60 L, C-90 H, C-120 L, LC-46 H, LMC-46 H)	0	0	0
29	MEM (NC)		NON CONNECTION	0.06	0.06	0.06
30	CLK	Input	Counter pulse terminal	18.8	0	0
31	IMMS (NC)		NON CONNECTION	0.06	0.06	0.06
32	NC		"	0.06	0.06	0.06
33	g	Output	Display tube data output terminal	0.05	0.05	1.6
34	f	Output		18.7	18.7	1.6
35	e	Output		18.7	18.7	1.4
36	d	Output		18.7	18.7	18.7
37	c	Output		18.7	18.7	9.4
38	b	Output		18.7	18.7	18.7
39	a	Output		18.7	18.7	18.7
40	DM_0	Input	Display mode terminal (COUNTER L, REM TIME H, STOP WATCH L, MMS H)	0.05	0.05	18.7
41	DM_1	Input	(COUNTER L, REM TIME L, STOP WATCH H, MMS H)	0.05	0.05	0.05
42	RESET	Input	Display tube zero-reset terminal	0.05	0.04	0.05
			When RESET is pushed:	18.8	18.8	18.8

SCHEMATIC DIAGRAM OF CAPSTAN SERVO UNIT

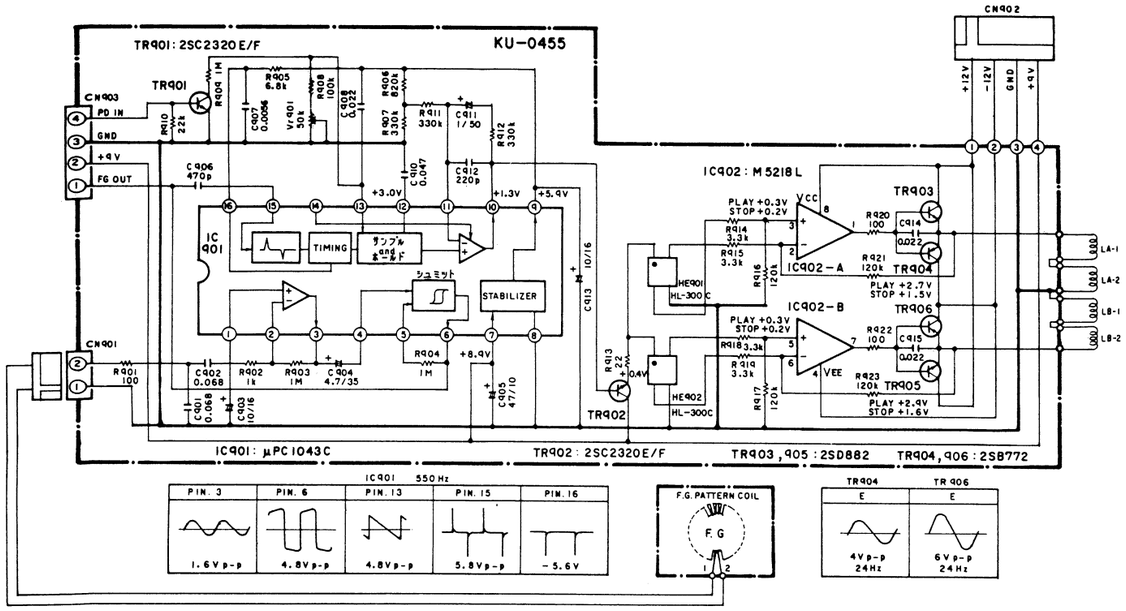

SCHEMATIC DIAGRAM OF CONTROL UNIT

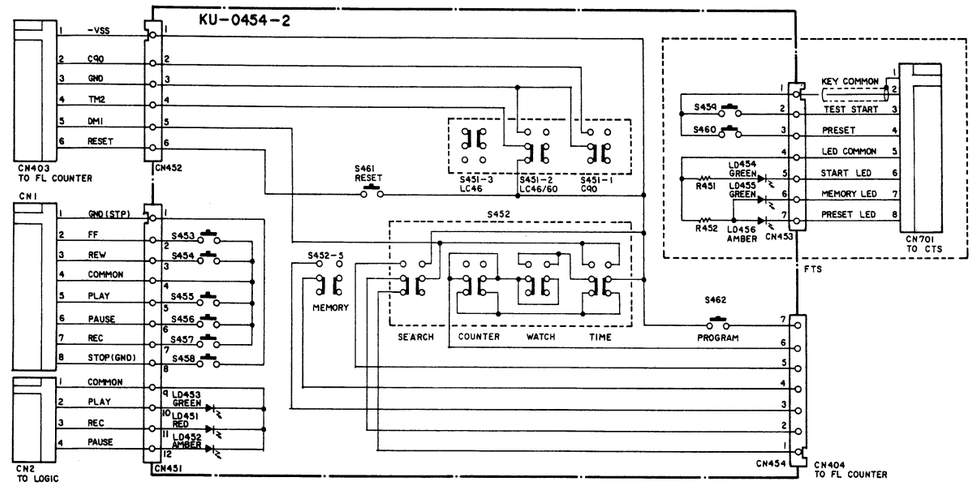

Note:
- Resistance shall be 1/4W unless otherwise specified and the unit is Ω.
- The unit of capacitor is μF, P is pF unless otherwise specified.
- This circuit diagram shows the basic circuit. It is subject to change for the purpose of improvement.

LEAD CONNECTION OF SEMICONDUCTORS

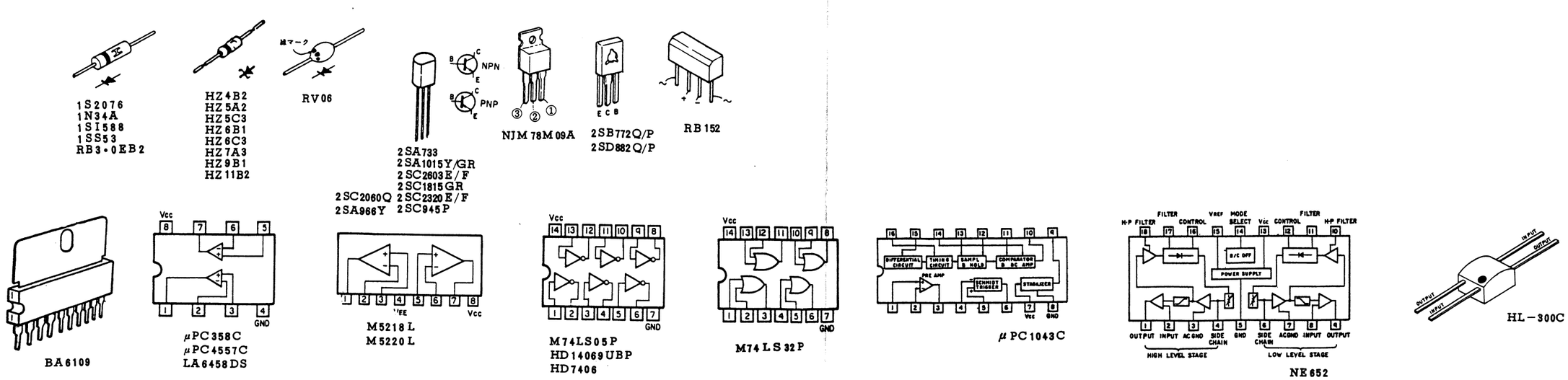

SCHEMATIC DIAGRAM

KU-0450C CUE UNIT

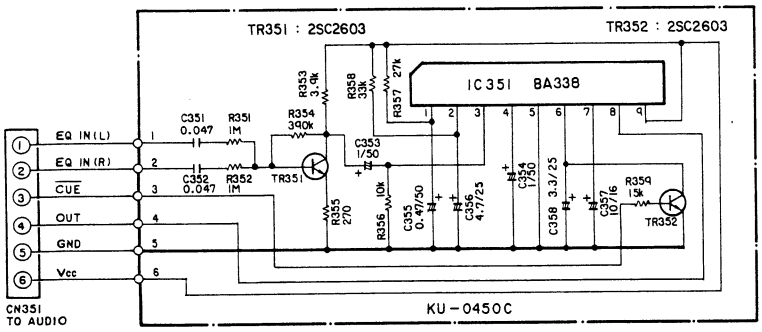

KU-0452 FL METER UNIT

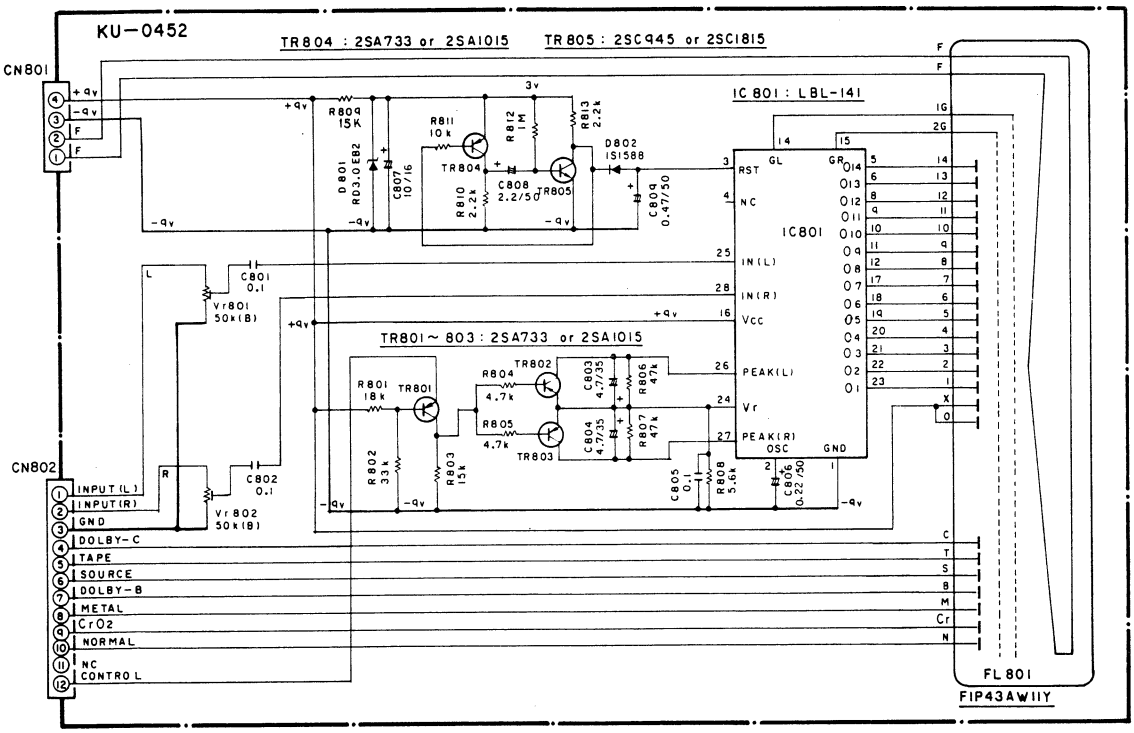

KU-0456 QUARTZ UNIT

(REVISED)

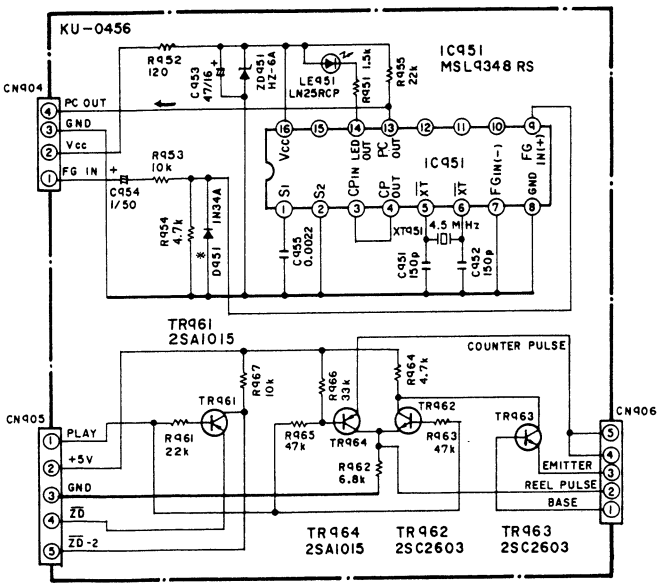

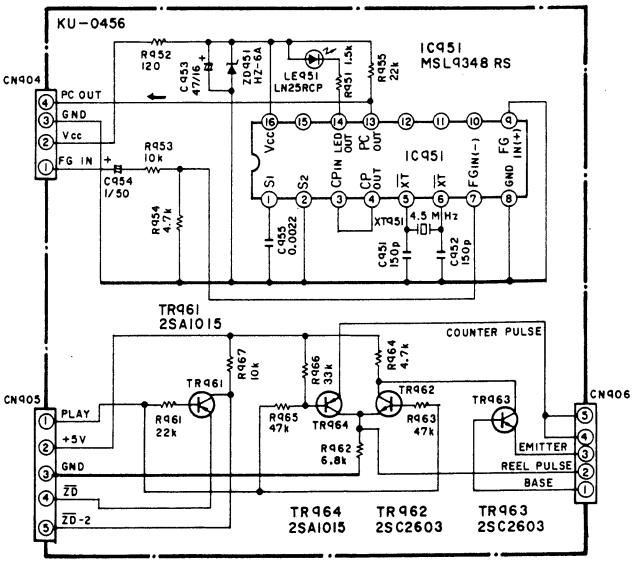

SH 013/20

DENON

Hi-Fi Component

240
368

SERVICE MANUAL

STEREO CASSETTE TAPE DECK

MODEL DR-M2/M3/M4

(IMPROVED TYPE)

Improvements have been made to the power source and logic circuits described in the already published DR-M2/M3/M4, and this Service Manual describes only the improved sections.
When repairs are being carried out, kindly refer to both this and the already published Service Manual. However, there are no changes either to the specifications or to the external appearance.

NIPPON COLUMBIA CO., LTD.

P. W. BOARD

KU-5110 LOGIC AND POWER UNIT

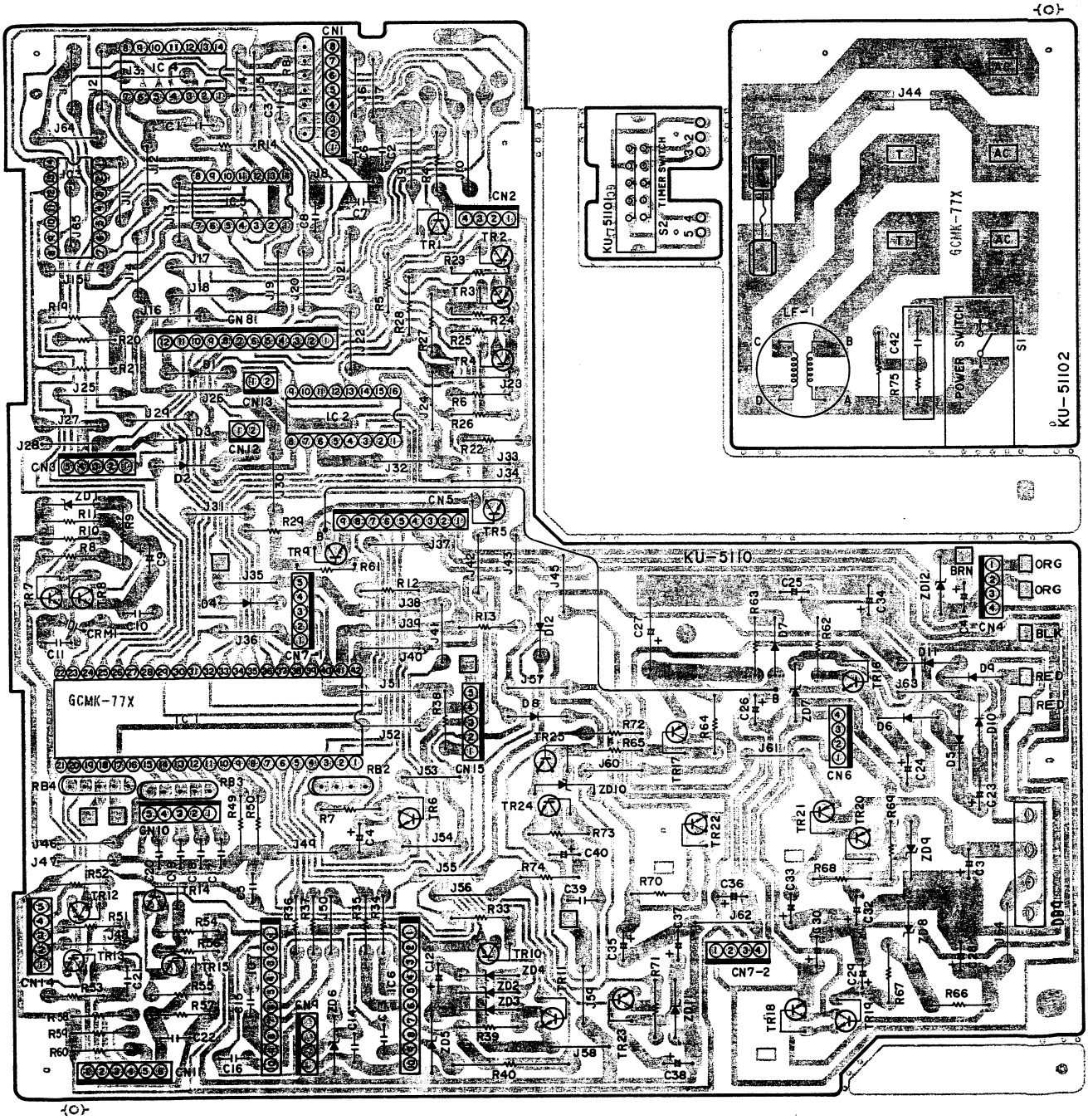

1S2076

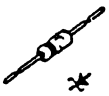

HZ3B3
HZ4B2
HZ5C3
HZ6C2
HZ6C3
HZ9B1
HZ11B2
HZ11A3

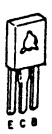

2SB772
2SD882

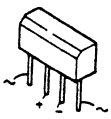

RB152

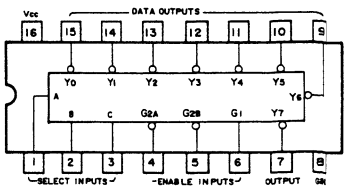

HD74LS138

RV06

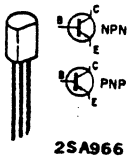

2SA966
2SA999
2SC2060
2SC2320

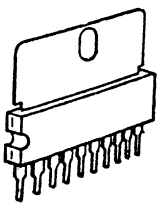

BA6109

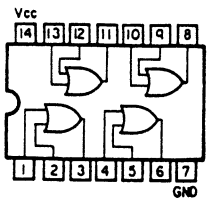

HD74LS32P

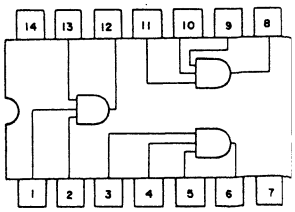

HD74LS15P

SCHEMATIC DIAGRAM OF LOGIC AND POWER UNIT

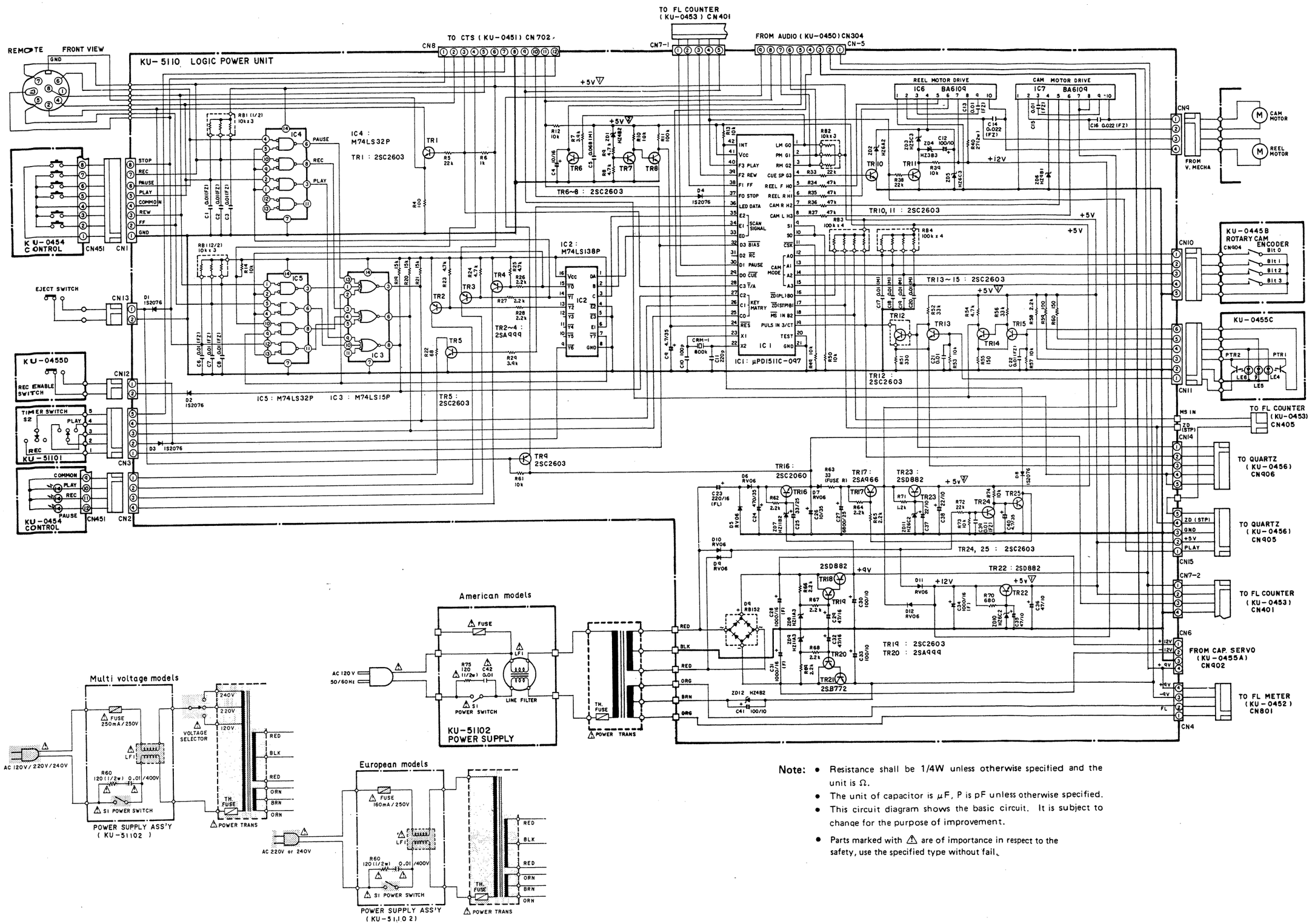

Note:

- Resistance shall be 1/4W unless otherwise specified and the unit is Ω.
- The unit of capacitor is μF, P is pF unless otherwise specified.
- This circuit diagram shows the basic circuit. It is subject to change for the purpose of improvement.
- Parts marked with ⚠ are of importance in respect to the safety, use the specified type without fail.

PARTS LIST OF P.W. BOARD

KU-5110 LOGIC AND POWER UNIT

Ref. No.	Part No.	Part Name	Remarks
SEMICONDUCTOR GROUP			
		I C	
IC1	2620408006	μPD1511C-097	
IC2	2620427003I	HD74LS138P	
IC3	2620443003	HD74LS15P	
IC4, 5	2620294003	HD74LS32P	
IC6, 7	2620326007	BA6109	
		Trangister	
TR17	2710105002	2SA966 (Y)	
TR2~4, 20	2710113010	2SA999(F)	
TR21	2720055029	2SB772Q/P	
TR16	2730195005	2SC2060(Q)	
TR1, 5~9, 11~15, 19, 24, 25	2730204022	2SC2320(E/F)	
TR18, 22 23	2740078031	2SD882 (Q/P)	
		Diode	
D1~4, 8	2760049008	IS2076	
D5~7 10~12	2760237001	RV06	
D9	2760246005	RB152	
ZD4	2760299052	HZ3B3	
ZD1, 12	2760185027	HZ4B2	
ZD3	2760236057	HZ5C3	
ZD10, 11	2760303003	HZ6C2	
ZD5	2760173071	HZ6C3	
ZD6	2760218046	HZ9B1	
ZD8, 9	2760052082	HZ11A3	
ZD7	2760052079	HZ11B2	
RESISTOR GROUP			
R40	2440079026	RS14B3D270JNBF	27Ω 2W
R63	2412315035	RD14B2E330GFRF	33Ω ¼W
R75 ⚠	2410163001	RD14B2H121J	120Ω ½W
RB1	2462018007	RK99=2B103MP6	10kΩx6 1/8W
RB2	2462011075	RK99=2B103MP3	10kΩx3 1/8W
RB3, 4	2462010092	RK99=2B104MP4	100kΩx4 1/8W
CAPACITOR GROUP			
		Ceramic	
C10	2533627000	CC45SL1H101J	100PF 50V
C11	2533635005	CC45SL1H221J	220PF 50V
C17~20	2531004007	CK45B1H102K	1000PF 50V
C1~3 6~8, 13 15, 21, 22 39	2531024003	CK45F1H103Z	0.01μF 50V
C14, 16	2531025002	CK45F1H223Z	0.022μF 50V
C5	2539014002	CK45=1E683M	0.068μF 25V
C42 ⚠	2538010007	CK45=2GAC103P	0.01μF 400V AC

Ref No.	Part No.	Part Name	Remarks
		Electrolytic	
C37, 38	2544128006	CE04W1A220=	22μF 10V
C35, 36	2544129005	CE04W1A470=	47μF 10V
C12, 33 41, 30	2544130007	CE04W1A101=	100μF 10V
C4	2544132005	CE04W1C100=	10μF 16V
C29, 32	2544135002	CE04W1C470=	47μF 16V
C23	2544163003	CE04W1C221M	220μF 16V
C28, 31 34	2544163032	CE04W1C102M	1000μF 16V
C25	2544137000	CE04W1E330=	33μF 25V
C27	2546060007	CE04W1E682M	6800μF 25V
C9, 40	2544140000	CE04W1V4R7=	4.7μF 35V
C26	2544141009	CE04W1V100=	10μF 35V
C24	2544165014	CE04W1V471M	470μF 35V
OTHER PARTS GROUP			
	4170140100	RADIATOR	
CN12, 13	2032075001	2PCONNECTOR BASE	
CN2, 6, 9	2035622024	4PMINI CONN PIN	
CN3, 10	2035622066	5PMINI CONN PIN	
CN11	2035622082	6PCONN BASE	
CN1	2035622037	8PMINI CONNE PIN	
CN5	2035622095	9PCONN BASE	
CN8	2050170001	12P BOARD BASE	
CN4	2037642015	4PEI WITH WIRE	
CN7	2045405008	9PEI CON WITH WIRE	
CN14	2039632023	5P EI CONNE WIRE	
CM1	3998031007	CERAMIC RESONATOR	
	2048110002	8P DIN JACK	
S2	2129188005	SLIDE SWITCH	
S1 ⚠	2129136028	POWER SW	
LF1 ⚠	2398019002	LINE FILTER COIL	
	FEP1287	FUSE HOLDER	
	4128747005	SHIELD BRACKET	

• The carbon resistors rated at ¼W are not listed herein.

WARNING:
Parts marked with ⚠ and/or shading have special characteristics important to safety. Be sure to use the specified parts for replacement.

DENON

NIPPON COLUMBIA CO., LTD.
No. 14-14, 4-CHOME AKASAKA,
MINATO-KU, TOKYO JAPAN
TEL: 03-584-8111
TLX: JAPANOLA J22591
CABLE: NIPPON COLUMBIA TOKYO

83.11 Printed in Japan